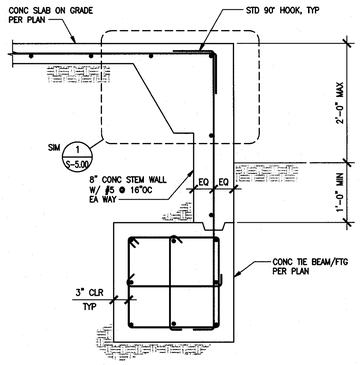

EDGE OF SLAB AT LOW EXTERIOR GRADE 1"=1'-0" 10

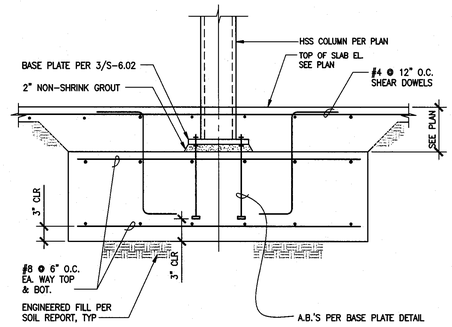

STAIR FRAME PAD FOOTING 1"=1'-0" 7

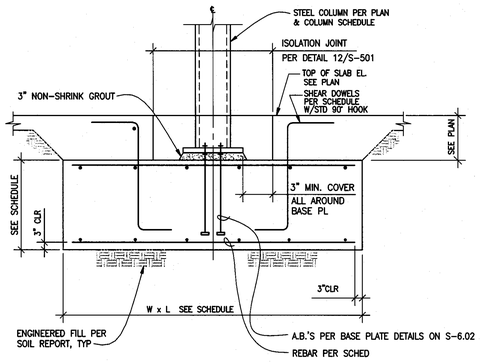

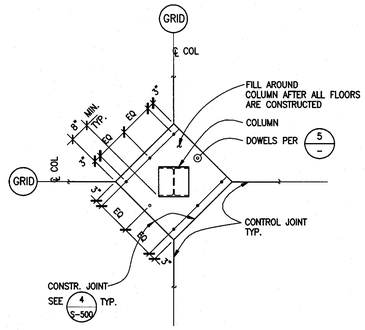

PLAN - ISOLATION AT COLUMN ? SLAB ON GRADE NTS 1

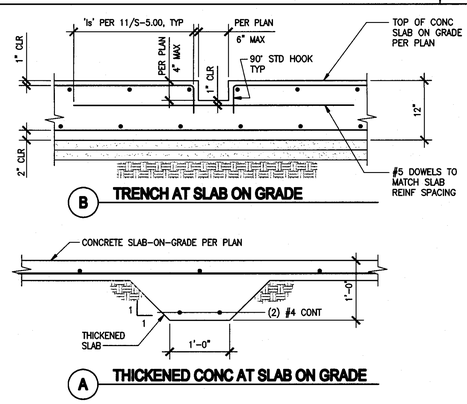

SLAB ON GRADE 1"=1'-0" 11

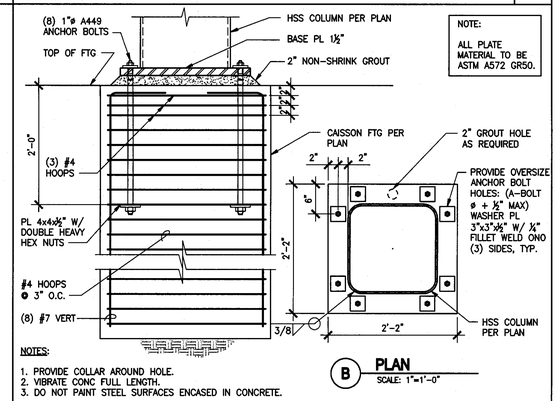

NOTE:
ALL PLATE MATERIAL TO BE ASTM A572 GR50.

NOTES:
1. PROVIDE COLLAR AROUND HOLE.
2. VIBRATE CONC FULL LENGTH.
3. DO NOT PAINT STEEL SURFACES ENCASED IN CONCRETE.

TELESCOPE FOOTING 1"=1'-0" 8

ISOLATED PAD FOOTING SCHEDULE

MARK	SIZE DEPTH	SIZE W x L	BOTTOM REINFORCING	TOP REINFORCING	SHEAR DOWELS
F1	1'-6"	4'-0" x 4'-0"	#6 @ 12"OC E.W.	–	#4 @ 12"OC
F2	1'-9"	6'-0" x 6'-0"	#6 @ 12"OC E.W.	–	#4 @ 12"OC
F3	2'-0"	8'-0" x 8'-0"	#6 @ 12"OC E.W.	–	#4 @ 12"OC
F4	2'-0"	10'-0" x 10'-0"	#7 @ 12"OC E.W.	–	#4 @ 12"OC
F5	2'-6"	12'-0" x 12'-0"	#8 @ 12"OC E.W.	–	#4 @ 12"OC
F6	2'-0"	8'-0" x 17'-8"	#7 @ 12"OC E.W.	#7 @ 12"OC E.W.	#4 @ 12"OC
F7	2'-0"	10'-0" x 19'-8"	#7 @ 12"OC E.W.	#7 @ 12"OC E.W.	#4 @ 12"OC
F8	2'-0"	10'-0" x 22'-2"	#7 @ 12"OC E.W.	#7 @ 12"OC E.W.	#4 @ 12"OC
F9	2'-0"	10'-0" x 20'-4"	#7 @ 12"OC E.W.	#7 @ 12"OC E.W.	#4 @ 12"OC

ISOLATED PAD FOOTING SCHEDULE 1"=1'-0" 5

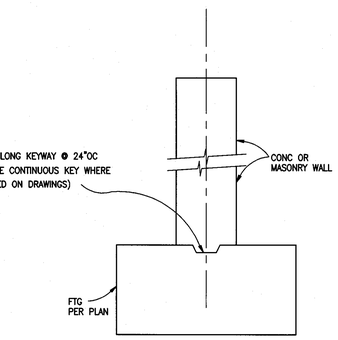

NOTE:
PROVIDE THIS DETAIL AT ALL CONCRETE WALLS, UNO.

TYPICAL CONCRETE CONSTRUCTION JOINTS 1"=1'-0" 2

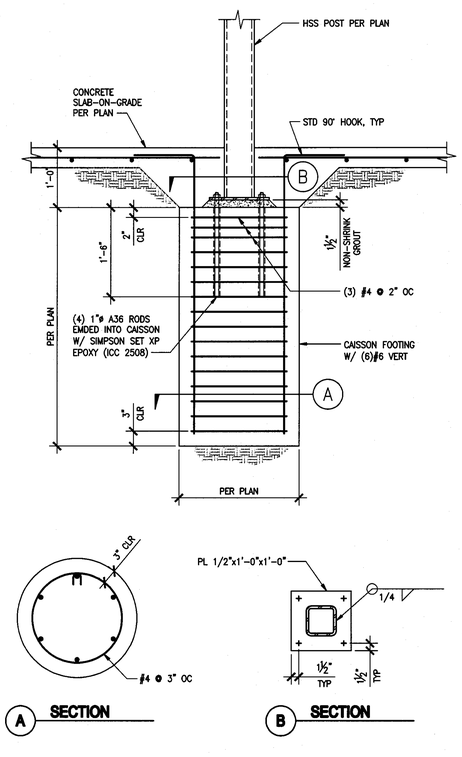

NOTES:
1. PROVIDE COLLAR AROUND HOLE.
2. VIBRATE CONC FULL LENGTH.
3. DO NOT PAINT STEEL SURFACES ENCASED IN CONCRETE.

JAMB POST FOOTING 1"=1'-0" 12

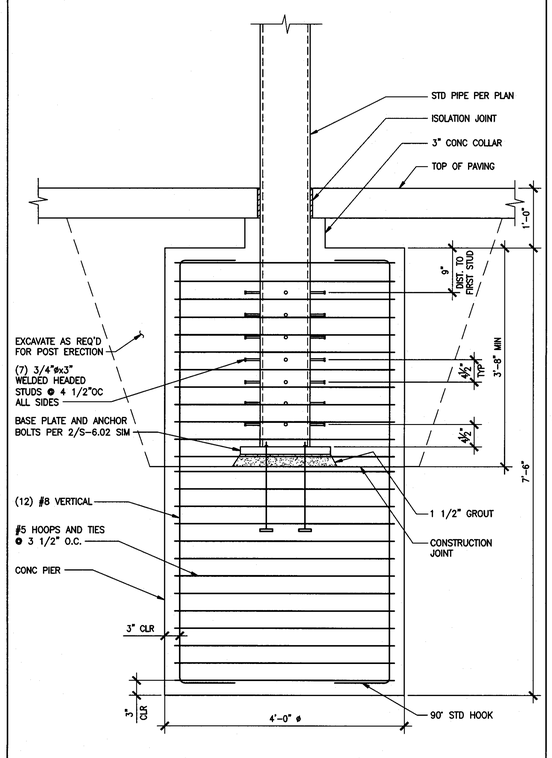

NOTES:
1. PROVIDE COLLAR AROUND HOLE.
2. VIBRATE CONC FULL LENGTH.
3. DO NOT PAINT STEEL SURFACES ENCASED IN CONCRETE.

CANOPY POST FOOTING 1"=1'-0" 9

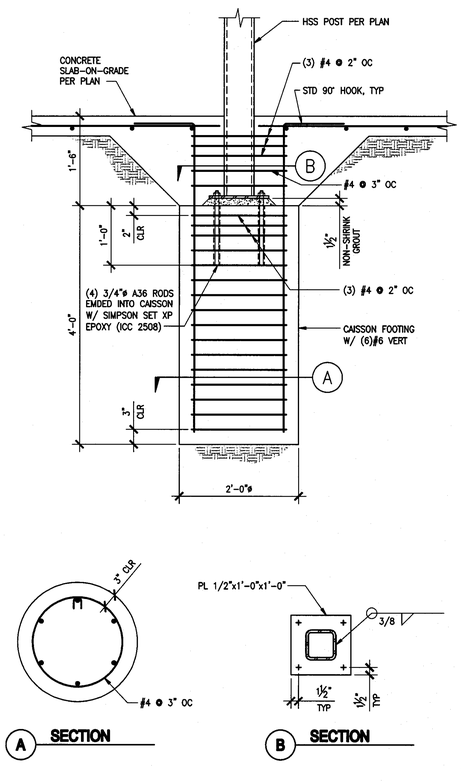

CATWALK POST FOOTING 1"=1'-0" 6

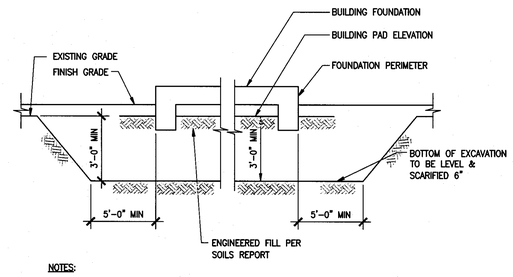

NOTES:
1. SEE GEOTECH REPORT FOR ADDITIONAL REQUIREMENTS.
2. WHERE BOTTOM OF FOUNDATION OCCURS BELOW ENGINEERED FILL, OVEREXCAVATE AND RECOMPACT UPPER 6" OF SOIL BELOW FOUNDATION.

OVER-EXCAVATION AND RECOMPACTION SECTION NTS 3

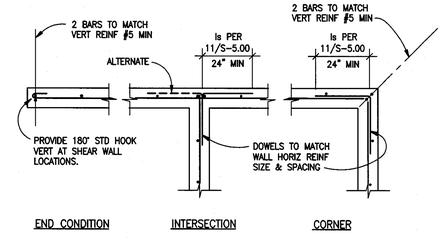

PLAN - CONCRETE WALL AND FOOTING DETAIL WITH SINGLE LAYER REINFORCING 1"=1'-0" 4

tBP
architecture planning interiors management
tBP/Architecture
5455 Wilshire Boulevard, Suite 1200
Los Angeles, CA 90036-4242
ph: 323. 556. 3788 fx: 323. 556. 3799
architect

kpff Consulting Engineers
301 North Lake Avenue, Suite 500
Pasadena, California 91101
(626) 578-181 Fax (626) 578-0121
consultant

REGISTERED PROFESSIONAL ENGINEER ALBERT W. LIM No. S4399 Exp. 12/31/09 STRUCTURAL STATE OF CALIFORNIA

IDENTIFICATION STAMP
DIV. OF THE STATE ARCHITECT
OFFICE OF REGULATION SERVICES
File No. 19-C11
Appl No. 03-112201
AC ___ RLS ___ SS SGA
DATE 10.13.09

DSA Los Angeles Basin Regional Office
700 North Alameda Street, Suite 5-500
Los Angeles, California 90012
ph: 213/897-3995 fx: 213/897-3159/0726
agency

ANTELOPE VALLEY COLLEGE
HEALTH & SCIENCE BUILDING
ANTELOPE VALLEY COMMUNITY COLLEGE DISTRICT
3041 WEST AVENUE K
LANCASTER, CA 93536-5426
owner

tBP project number : 20641.00
file name: S-501.DWG
drawn by: SG checked by: CD
date: JULY 30, 2009 - 100% CD

Rev:	date:	description:

THIS DRAWING AND THE DESIGNS, DEPICTIONS, IDEAS AND OTHER INFORMATION CONTAINED HEREIN CONSTITUTE UNPUBLISHED WORK OF tBP/ARCHITECTURE AND SHALL REMAIN THE PROPERTY OF tBP/ARCHITECTURE IN PERPETUITY. NO PART THEREOF SHALL BE REPRODUCED, DISCLOSED, DISTRIBUTED, SOLD, PUBLISHED OR OTHERWISE USED IN ANY WAY WITHOUT THE ADVANCED EXPRESS WRITTEN CONSENT OF tBP/ARCHITECTURE.

drawing title:
TYPICAL CONCRETE DETAILS

drawing no.:
S-5.01
drawing of

File: W:\20071\107833 - Antelope Valley College - Health and Science Building\detail\S-501.dwg
Plotted: 9/16/09 at 1:21pm By: cvallejo
XREFS: 107833_TB.dwg