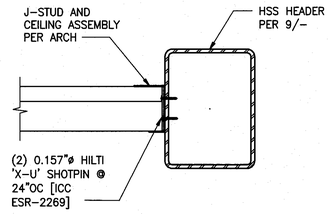

CEILING JOIST TO HSS HEADER DETAIL 3"=1'-0" **11**

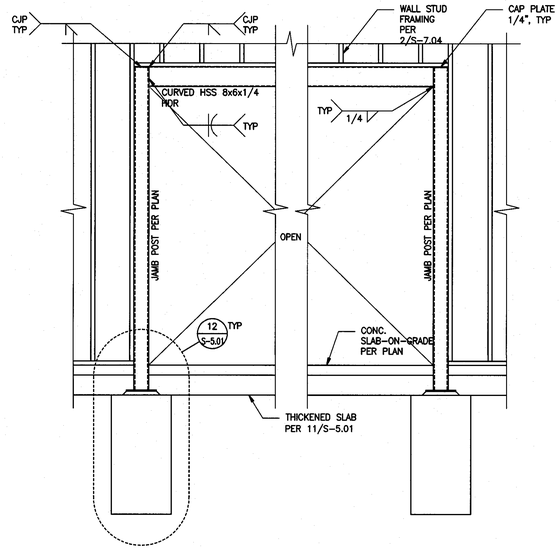

ELEVATION 1/2"=1'-0" **9**

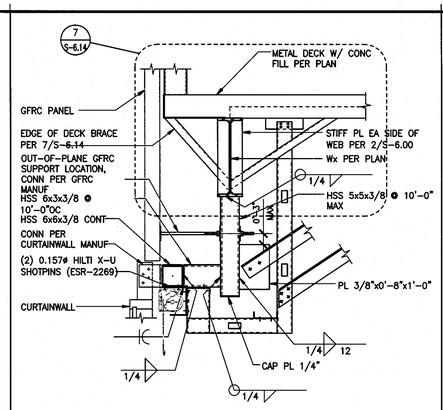

HEAD FRAMING AT GFRC / CURTAINWALL 3/4"=1'-0" **5**

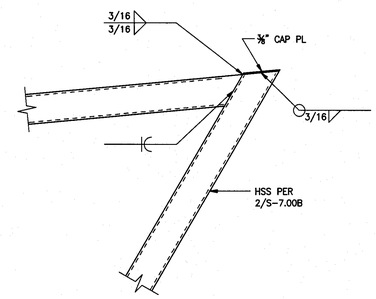

HSS CONNECTION ? PARAPET 1"=1'-0" **1**

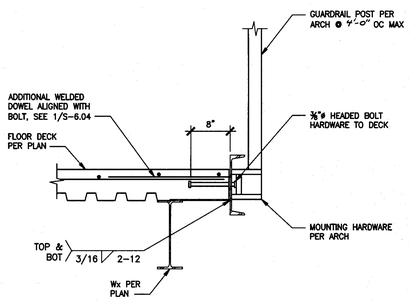

GUARDRAIL AT EDGE OF DECK 1"=1'-0" **12**

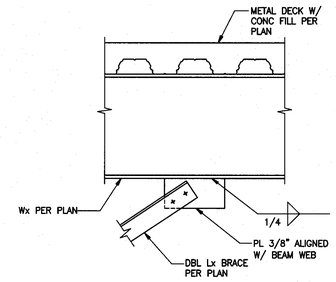

DBL L BRACE TO PERPENDICULAR BEAM 1"=1'-0" **6**

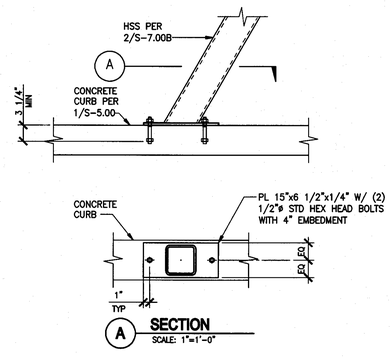

HSS CONNECTION TO CURB 1"=1'-0" **2**

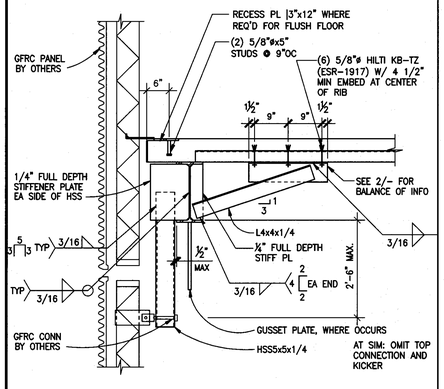

ALTERNATE HSS CONNECTION AT GUSSET PLATE NTS **13**

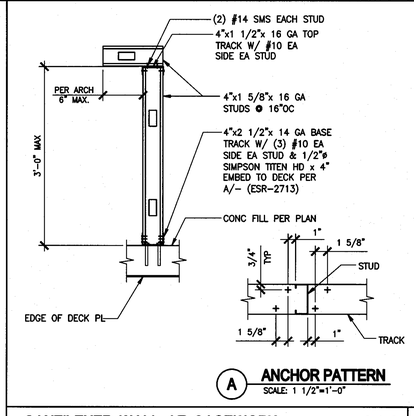

CANTILEVER WALL AT CASEWORK 1"=1'-0" **7**

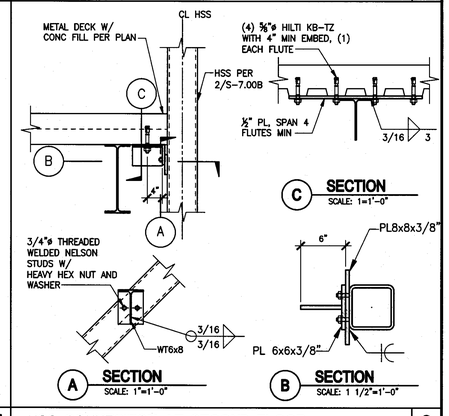

HSS CONNECTION AT SECOND FLOOR 1"=1'-0" **3**

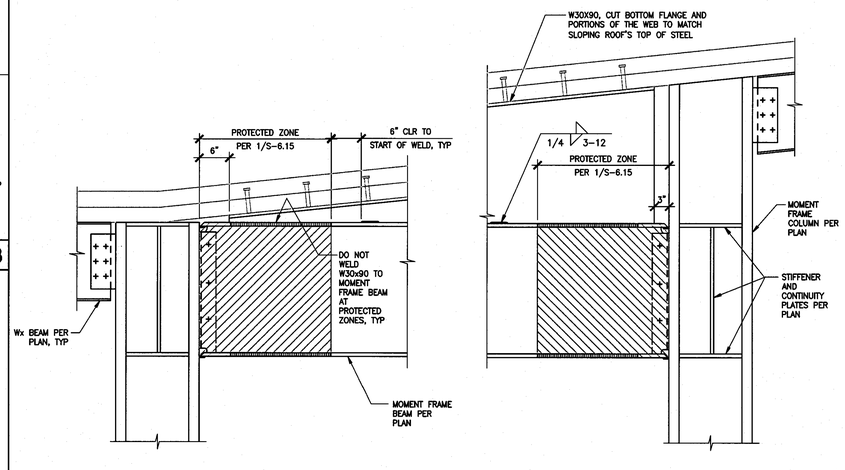

SLOPED PLANETARIUM ROOF AT MOMENT FRAME BEAM DETAIL 1"=1'-0" **10**

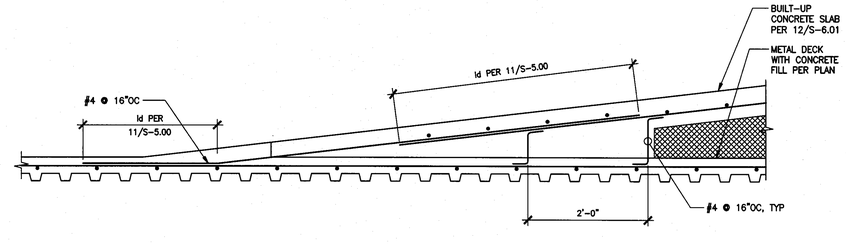

REINFORCEMENT AT DECK RECESS 1"=1'-0" **4**

tBP architecture planning interiors management
tBP/Architecture
5455 Wilshire Boulevard, Suite 1200
Los Angeles, CA 90036-4242
ph: 323. 556. 3788 fx: 323. 556. 3799
LICENSED ARCHITECT STATE OF CALIFORNIA
architect

kpff Consulting Engineers
301 North Lake Avenue, Suite 600
Pasadena, California 91101
(626) 578-1921 Fax (626) 578-0481
REGISTERED PROFESSIONAL ENGINEER STRUCTURAL STATE OF CALIFORNIA
consultant

IDENTIFICATION STAMP
DIV. OF THE STATE ARCHITECT
OFFICE OF REGULATION SERVICES
File No. 19-C11
Appl No. 03-112091
AC ___ RS ___ SS 5.6.6
DATE 10 . 13 . 09

DSA Los Angeles Basin Regional Office
700 North Alameda Street, Suite 5-500
Los Angeles, California 90012
ph: 213/897-3995 fx: 213/897-3159/0726
agency

ANTELOPE VALLEY COLLEGE HEALTH & SCIENCE BUILDING

ANTELOPE VALLEY COMMUNITY COLLEGE DISTRICT
3041 WEST AVENUE K
LANCASTER, CA 93536-5426

owner

tBP project number : 20641.00
file name: S-616.DWG
drawn by: SG checked by: GD
date: JULY 30, 2009 - 100% CD

Rev:	date:	description:

THIS DRAWING AND THE DESIGNS, DEPICTIONS, IDEAS AND OTHER INFORMATION CONTAINED HEREIN CONSTITUTE UNPUBLISHED WORK OF tBP/ARCHITECTURE AND SHALL REMAIN THE PROPERTY OF tBP/ARCHITECTURE IN PERPETUITY. NO PART THEREOF SHALL BE REPRODUCED, DISCLOSED, DISTRIBUTED, SOLD, PUBLISHED OR OTHERWISE USED IN ANY WAY WITHOUT THE ADVANCED EXPRESS WRITTEN CONSENT OF tBP/ARCHITECTURE.

drawing title:

DETAILS

drawing no.:

S-6.16

drawing of

File: W:\20641\109633 - Antelope Valley College - Health and Science Building\sdraft\S-616.dwg
Plotted on 10/13/09 at 2:14pm By: cvelez
XREFS: 1@S3D, fb.dwg