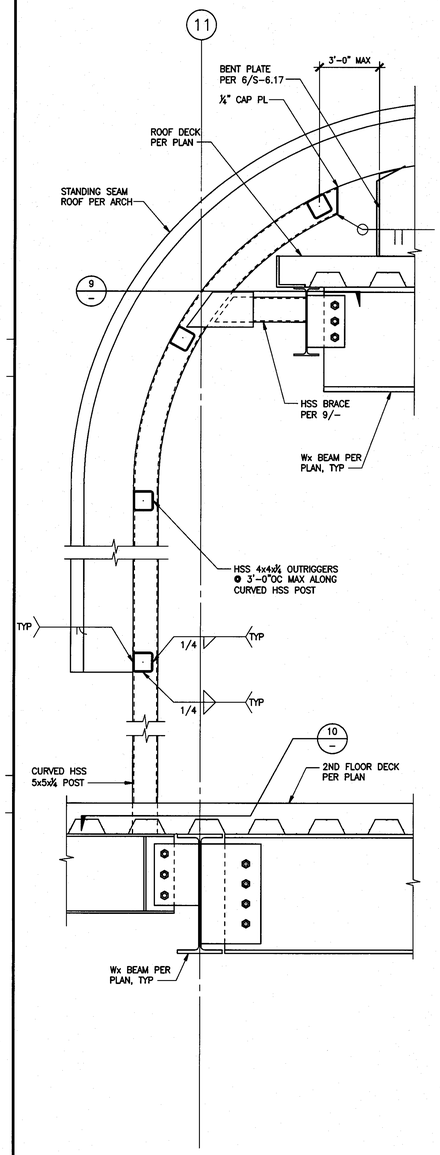

STANDING SEAM ROOF SECTION 1"=1'-0" 11

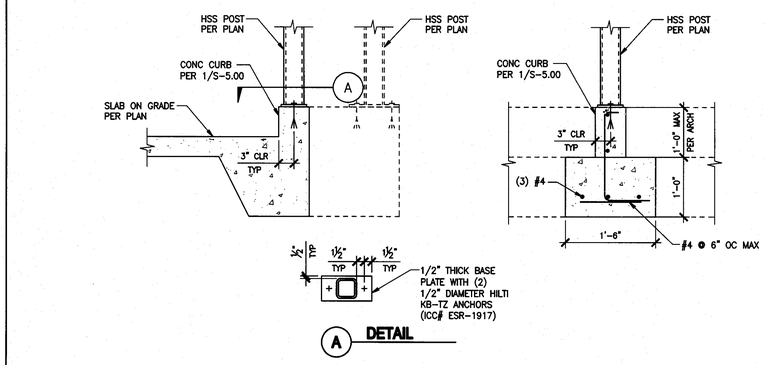

METAL FIN AT STAIR 3 HSS POST BASE DETAIL 1"=1'-0" 6

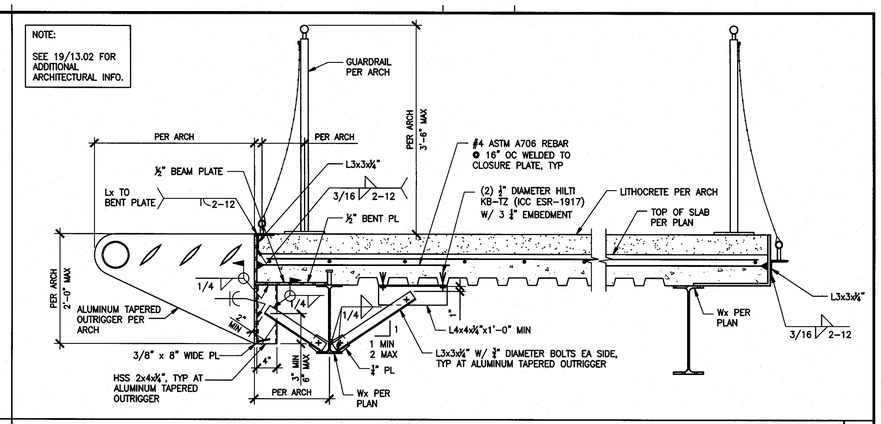

ALUMINUM TAPERED OUTRIGGER SUPPORT AT OBSERVATION DECK 1"=1'-0" 1

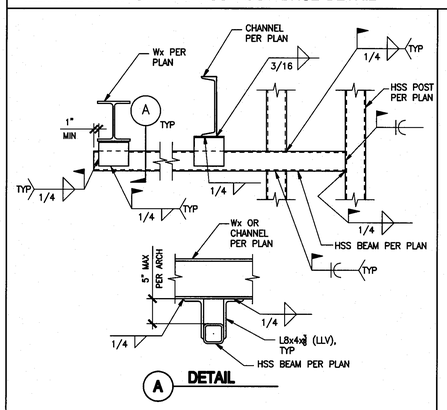

HSS CONNECTION DETAILS 1"=1'-0" 8

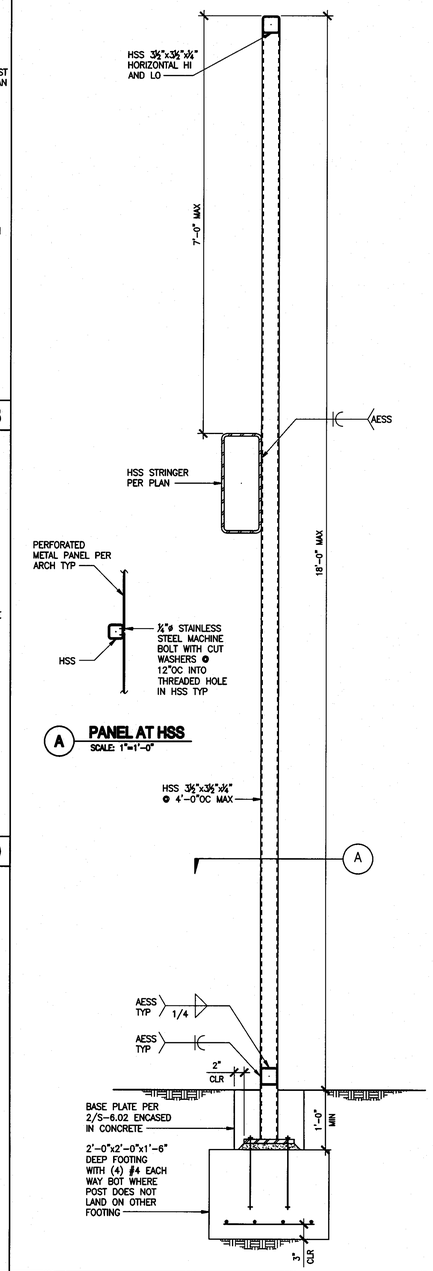

SECTION AT PERFORATED PANEL SCREEN 1"=1'-0" 7

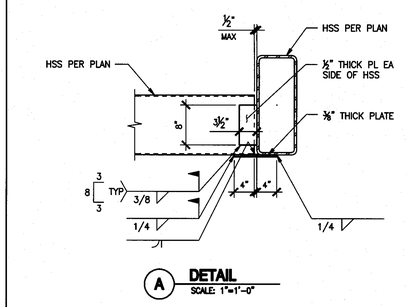

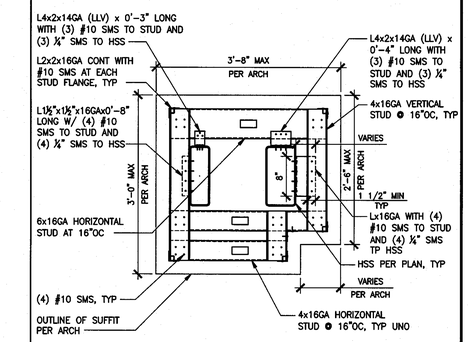

CANOPY SOFFIT FRAMING 1"=1'-0" 2

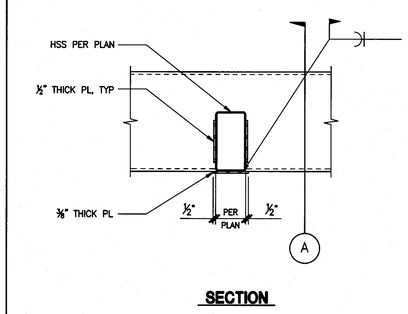

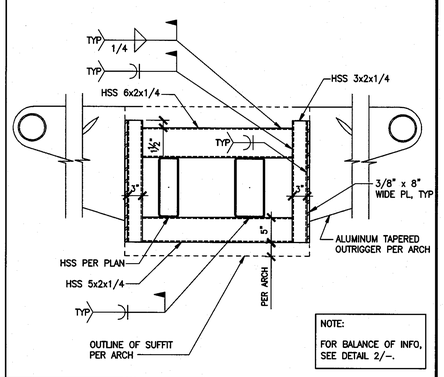

CANOPY CONNECTION DETAIL AT HSS 1"=1'-0" 5

CANOPY FRAMING AT OUTRIGGER 1"=1'-0" 3

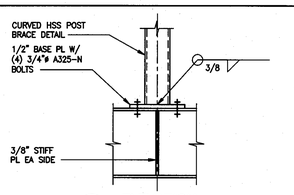

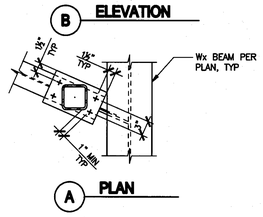

CURVED HSS POST BRACE PLATE DETAIL 1"=1'-0" 10

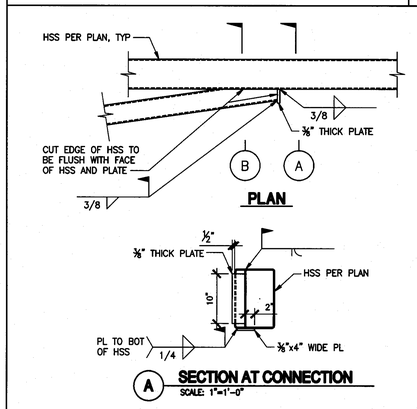

CANOPY FRAMING DETAIL 1"=1'-0" 4

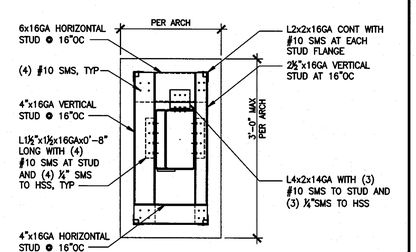

tBP
architecture planning interiors management
tBP/Architecture
5455 Wilshire Boulevard, Suite 1200
Los Angeles, CA 90036-4242
ph: 323. 556. 3788 fx: 323. 556. 3799
LICENSED ARCHITECT
STATE OF CALIFORNIA
architect

kpff Consulting Engineers
301 North Lake Avenue, Suite 550
Pasadena, California 91101
626/93 578-1921 Fax 626/93 578-1921
REGISTERED PROFESSIONAL ENGINEER
STRUCTURAL
STATE OF CALIFORNIA
consultant

IDENTIFICATION STAMP
DIV. OF THE STATE ARCHITECT
OFFICE OF REGULATION SERVICES
File No. 19-C11
Appl No. 03-112201
AC ____ RS 5/5/09
DATE 10-13-09

DSA Los Angeles Basin Regional Office
700 North Alameda Street, Suite 5-500
Los Angeles, California 90012
ph: 213/897-3995 fx: 213/897-3159/0726
agency

ANTELOPE VALLEY COLLEGE HEALTH & SCIENCE BUILDING

ANTELOPE VALLEY COMMUNITY COLLEGE DISTRICT
3041 WEST AVENUE K
LANCASTER, CA 93536-5426

owner

tBP project number: 206410.00
file name: S-616.DWG
drawn by: SG checked by: GD
date: JULY 30, 2009 - 100% CD

Rev:	date:	description:

THIS DRAWING AND THE DESIGNS, DEPICTIONS, IDEAS AND OTHER INFORMATION CONTAINED HEREIN CONSTITUTE UNPUBLISHED WORK OF tBP/ARCHITECTURE AND SHALL REMAIN THE PROPERTY OF tBP/ARCHITECTURE IN PERPETUITY. NO PART THEREOF SHALL BE REPRODUCED, DISCLOSED, DISTRIBUTED, SOLD, PUBLISHED OR OTHERWISE USED IN ANY WAY WITHOUT THE ADVANCED EXPRESS WRITTEN CONSENT OF tBP/ARCHITECTURE.

drawing title:
DETAILS

drawing no.:
S-6.17
drawing of

File: M:\20071.00\S3 - Antelope Valley College - Health and Science Building\plotdrl\S-617.dwg
Plot Date: 7/30/09 at 1:42pm By: cruddis
XREFS: 19-S3S, tb.dwg