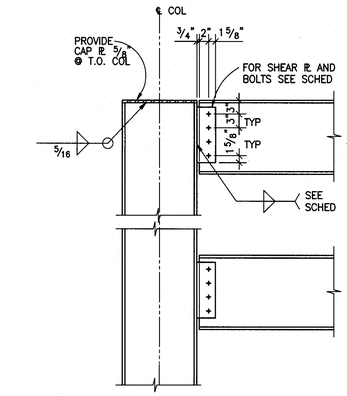

BEAM TO COLUMN FLANGE (A)

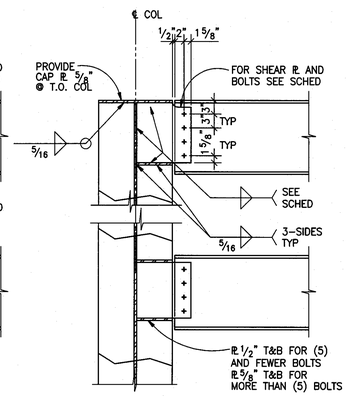

BEAM TO COLUMN WEB (B)

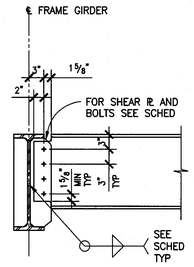

BEAM TO GIRDER (C)

NOTE:
PROVIDE FULL HEIGHT STIFFENER PL EA SIDE WHERE INDICATED ON PLANS THUS

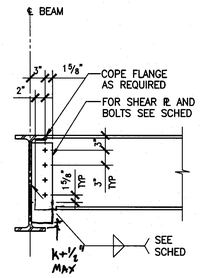

BEAM TO BEAM (D)

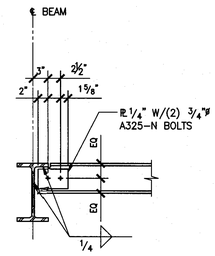

W6 OR C6 CONNECTION (E)

STANDARD BOLTED CONNECTION SCHEDULE				
BEAM SIZE	NO.& SIZE OF BOLTS REQUIRED	PLATE THICKNESS	WELD SIZE	CONN. CAPACITY (SING.SHEAR)
W8 C8	(2) 7/8"ø	1/4"	1/4"	11.1K
W10 C10	(2) 7/8"ø	1/4"	1/4"	11.1K
W12 C12	(3) 7/8"ø	1/4"	1/4"	22.1K
W14	(3) 7/8"ø	1/4"	1/4"	22.1K
W16	(4) 7/8"ø	3/8"	1/4"	35.4K
W18	(5) 7/8"ø	3/8"	1/4"	49.1K
W21	(6) 7/8"ø	3/8"	1/4"	62.7K
W24	(7) 7/8"ø	3/8"	5/16"	76.4K
W27	(7) 7/8"ø	3/8"	5/16"	76.4K
W30	(8) 7/8"ø*	1/2"	3/8"	83.9K
W33	(9) 7/8"ø*	1/2"	3/8"	91.2K
W36	(9) 7/8"ø*	1/2"	3/8"	91.2K

CONNECTION NOTES:

1. ALL BOLTS TO BE ASTM A325-N AND FULLY PRETENSIONED PER AISC STANDARDS.
2. CONNECTION PLATES TO HAVE AISC STANDARD ROUND HOLES UNLESS NOTED OTHERWISE.
3. ALL CONNECTION PLATE MATERIAL TO BE A36.
4. * INDICATES USE HORIZONTAL SHORT SLOTTED HOLES IN THE PLATE AT COLUMN CONNECTION ONLY.
5. # SHOWN ON PLANS INDICATES NUMBER OF BOLTS REQUIRED. IF NOT SHOWN ON PLANS USE NUMBER OF BOLTS SHOWN ON SCHEDULE.

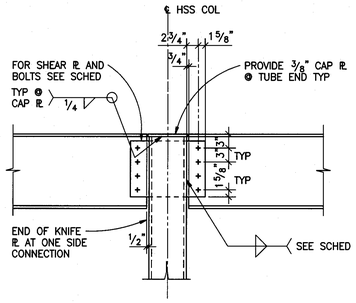

GIRDER TO HSS COLUMN (F)

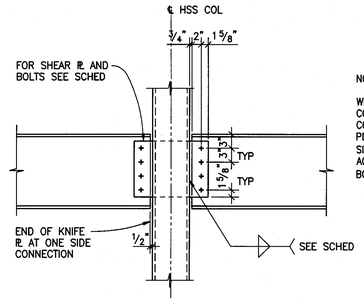

2 BEAMS TO HSS COLUMN (G)

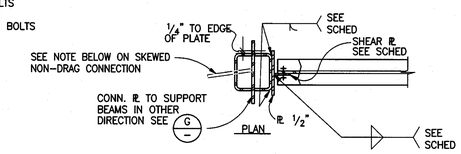

NOTE:

WHERE SKEWED NON-DRAG CONNECTION FRAMES INTO HSS COLUMN, PROVIDE SHEAR PLATE AND SPLICE DETAILS SIMILAR TO 3/S-6.03 WITH ACTUAL PLATE THICKNESS AND BOLTS PER 1/S-6.00

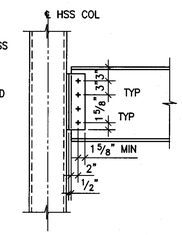

3 BEAMS TO HSS COLUMN (H)

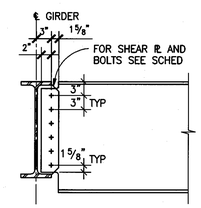

DEEP BEAM TO SHALLOW GIRDER (I)

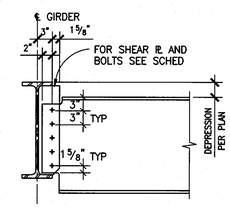

DEPRESSED BEAM TO GIRDER (J)

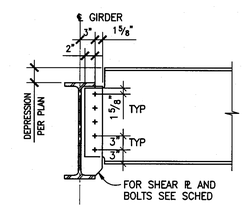

BEAM TO DEPRESSED GIRDER (K)

STANDARD BOLTED BEAM CONNECTION DETAILS

1"=1'-0" | 1

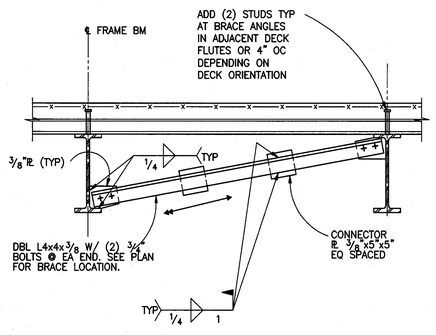

LATERAL BRACE DETAIL

1"=1'-0" | 7

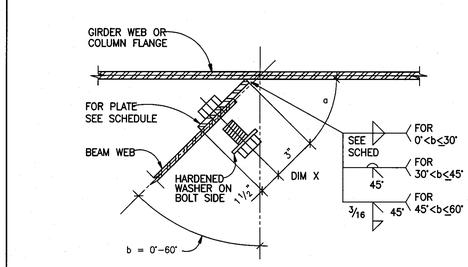

PLAN

SKEWED BEAM CONNECTION SCHEDULE					
BEAM SIZE	NO.& SIZE OF BOLTS REQUIRED	PLATE THICKNESS	CONN CAPACITY (SING.SHEAR)	WELD FOR 0°<b<10°	WELD FOR 10°<b<30°
W8	(2) 7/8"ø	3/8"	11.1K	S+1/16	S+1/8
W10 C10	(2) 7/8"ø W/ 4"GA	3/8"	13.7K		
W12 C12	(3) 7/8"ø	3/8"	22.1K		
W14	(3) 7/8"ø	3/8"	22.1K		
W16	(4) 7/8"ø	3/8"	35.4K		
W18	(5) 7/8"ø	3/8"	49.1K		
W21	(6) 7/8"ø	3/8"	62.7K		
W24	(7) 7/8"ø	3/8"	76.4K		
W27	(7) 7/8"ø	3/8"	76.4K		
W30	(8) 7/8"ø	1/2"	83.9K		
W33	(9) 7/8"ø*	1/2"	91.2K	S+1/8	45°
W36	(9) 7/8"ø*	1/2"	91.2K		

NOTES:
1. FILLET WELD SIZE S = PLATE THICKNESS.
2. FOR BEVEL WELDS, BEVEL END OF CONNECTION PLATE TO MAINTAIN α AT 45°.
3. DO NOT INCREASE DIM X WITHOUT ENGINEER'S APPROVAL.
4. * USE HORIZ SHORT SLOTTED HOLES IN PLATE AT COL CONN ONLY.
5. SEE DET 1/- FOR ADDITIONAL NOTES.

SKEWED BEAM CONN (FOR SKEW ANGLE=0°<b<60°)

1"=1'-0" | 6

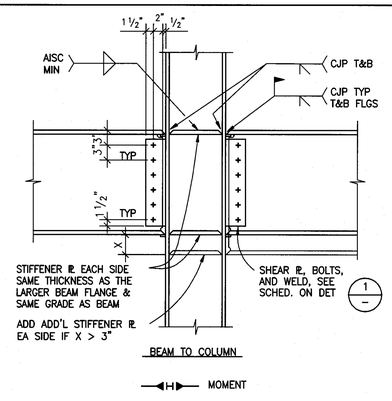

BEAM TO COLUMN

BEAM TO COLUMN FLANGE MOMENT CONNECTION

1"=1'-0" | 4

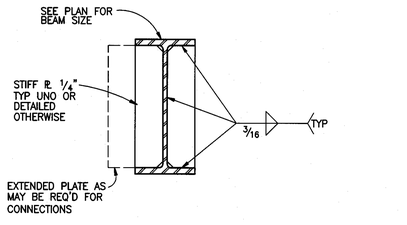

NOTE:
USE LARGER PLATE AND WELD AS MAY BE REQ'D BY BEAM CONNECTION SCHEDULE.

TYPICAL STIFFENER PLATES

1"=1'-0" | 2

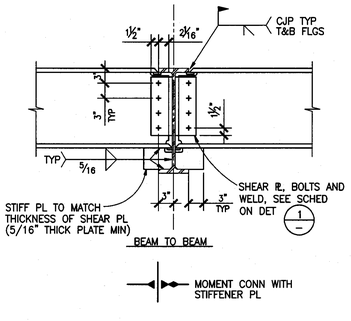

BEAM TO BEAM MOMENT CONN WITH STIFFENER PL

1"=1'-0" | 8

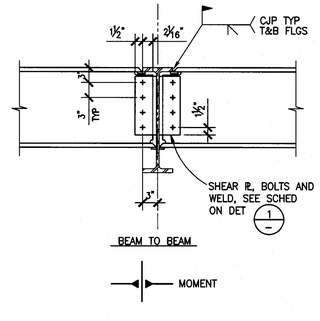

BEAM TO BEAM MOMENT CONNECTION

1"=1'-0" | 5

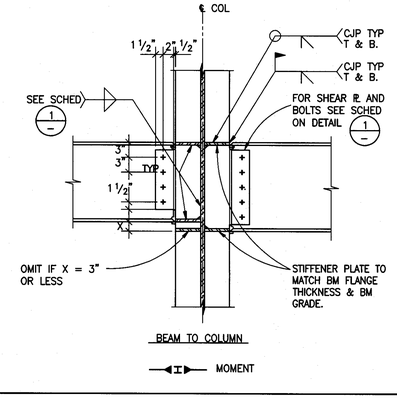

BEAM TO COLUMN WEB MOMENT CONNECTION

1"=1'-0" | 3

File: W:\2007\107833 - Antelope Valley College - Health and Science Building\sheet\S-600.dwg
Plotted: 9/18/09 at 1:21pm By: cvelasco
XREFs: 1478313_ts.dwg

tBP
architecture planning interiors management
tBP/Architecture
5455 Wilshire Boulevard, Suite 1200
Los Angeles, CA 90036-4242
ph: 323. 556. 3788 fx: 323. 556. 3799
LICENSED ARCHITECT STATE OF CALIFORNIA
architect

kpff Consulting Engineers
301 North Lake Avenue, Suite 600
Pasadena, California 91101
(626) 578-181 Fax (626) 578-0481
REGISTERED PROFESSIONAL ENGINEER STRUCTURAL STATE OF CALIFORNIA
consultant

IDENTIFICATION STAMP
DIV. OF THE STATE ARCHITECT
OFFICE OF REGULATION SERVICES
File No. 19-C11
Appl No. 03-112281
AC RLS SS SQ
DATE 10-13-09

DSA Los Angeles Basin Regional Office
700 North Alameda Street, Suite 5-500
Los Angeles, California 90012
ph: 213/897-3995 fx: 213/897-3159/0726
agency

ANTELOPE VALLEY COLLEGE HEALTH & SCIENCE BUILDING

ANTELOPE VALLEY COMMUNITY COLLEGE DISTRICT
3041 WEST AVENUE K
LANCASTER, CA 93536-5426

owner

tBP project number : 20641.00
file name: S-600.DWG
drawn by: SG checked by: GD
date: JULY 30, 2009 - 100% CD

Rev:	date:	description:

THIS DRAWING AND THE DESIGNS, DEPICTIONS, IDEAS AND OTHER INFORMATION CONTAINED HEREIN CONSTITUTE UNPUBLISHED WORK OF tBP/ARCHITECTURE AND SHALL REMAIN THE PROPERTY OF tBP/ARCHITECTURE IN PERPETUITY. NO PART THEREOF SHALL BE REPRODUCED, DISCLOSED, DISTRIBUTED, SOLD, PUBLISHED OR OTHERWISE USED IN ANY WAY WITHOUT THE ADVANCED EXPRESS WRITTEN CONSENT OF tBP/ARCHITECTURE.

drawing title:
TYPICAL STEEL DETAILS

drawing no.:
S-6.00
drawing of