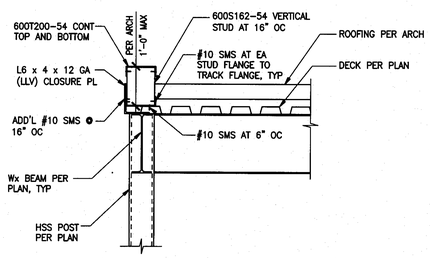

EDGE OF DECK DETAIL AT ELEVATOR / STAIR HIGH ROOF 1"=1'-0" **10**

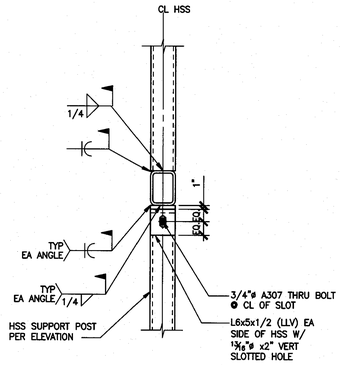

HSS GUIDERAIL TO HSS BEAM CONNECTION DETAIL 1"=1'-0" **6**

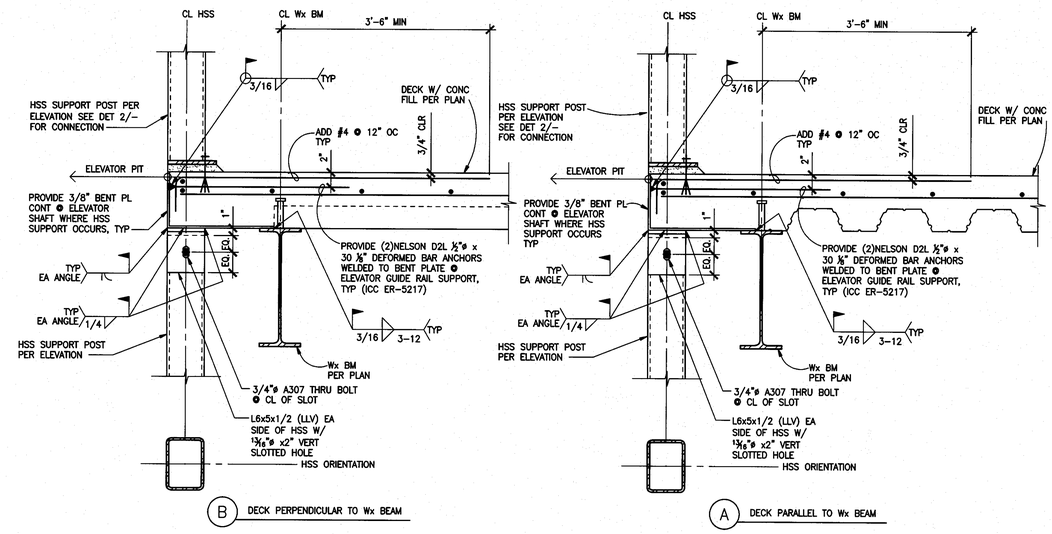

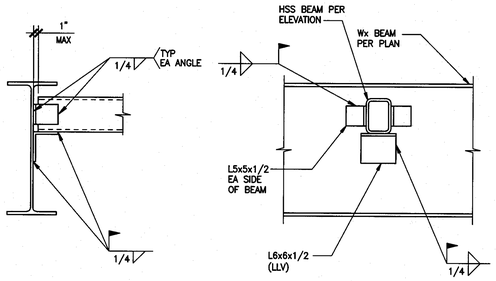

HSS BEAM TO WX BEAM CONNECTION DETAIL 1"=1'-0" **7**

HSS SUPPORT POST AT EDGE OF DECK 1"=1'-0" **1**

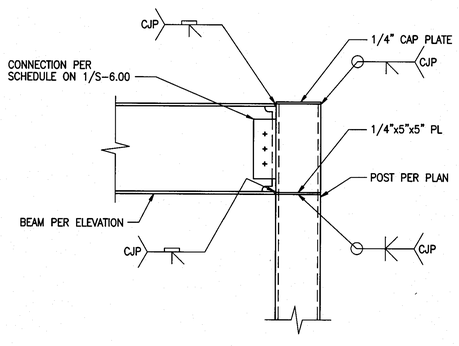

BEAM TO COLUMN CONNECTION DETAIL 1 1/2"=1'-0" **8**

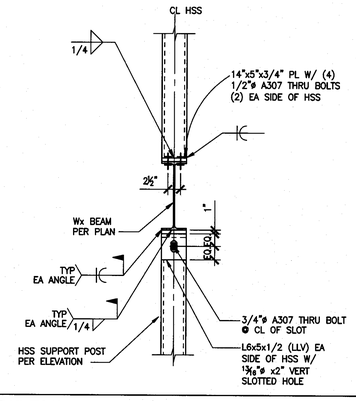

HSS GUIDERAIL TO Wx BEAM DETAIL 1"=1'-0" **4**

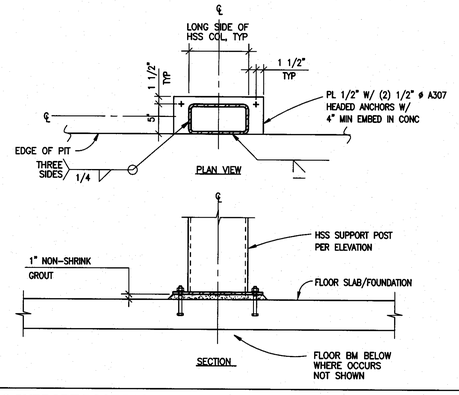

HSS SUPPORT POST BASE PLATE DETAIL 1"=1'-0" **2**

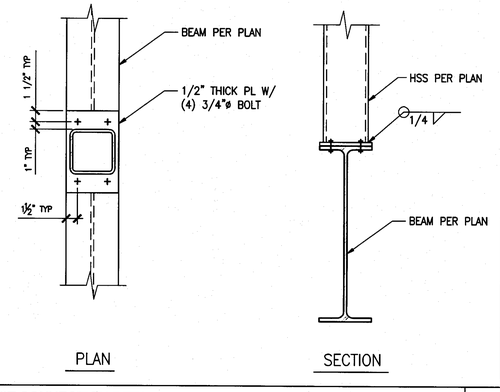

POST CONNECTION DETAIL 1 1/2"=1'-0" **9**

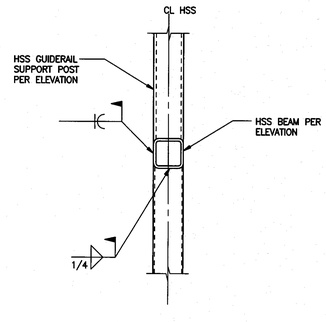

HSS BEAM TO HSS GUIDERAIL CONNECTION DETAIL 1"=1'-0" **5**

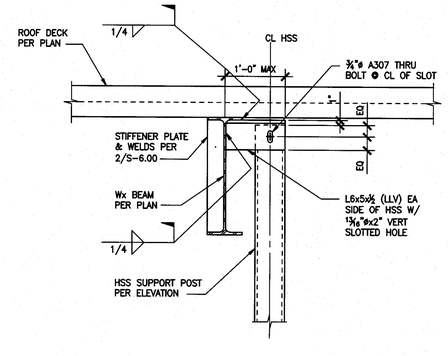

HSS SUPPORT POST AT ROOF DECK 1"=1'-0" **3**

File: W:\2007\107833 - Antelope Valley College - Health and Science Building\sdraft\S-910.dwg
Plotted: 9/15/09 at 1:24pm By: cvallido
XREFS: 107833_Ib.dwg

tBP architecture planning interiors management
LICENSED ARCHITECT STATE OF CALIFORNIA
tBP/Architecture
5455 Wilshire Boulevard, Suite 1200
Los Angeles, CA 90036-4242
ph: 323. 556. 3788 fx: 323. 556. 3799
architect

kpff Consulting Engineers
301 North Lake Avenue, Suite 500
Pasadena, California 91101
(626) 578-1811 Fax (626) 578-0821
REGISTERED PROFESSIONAL ENGINEER STRUCTURAL STATE OF CALIFORNIA
consultant

IDENTIFICATION STAMP
DIV. OF THE STATE ARCHITECT
OFFICE OF REGULATION SERVICES
File No. 19-C11
Appl No. 03-112201
AC ___ RS ___ SS Sep
DATE 10-13-09

DSA Los Angeles Basin Regional Office
700 North Alameda Street, Suite 5-500
Los Angeles, California 90012
ph: 213/897-3995 fx: 213/897-3159/0726
agency

owner

ANTELOPE VALLEY COLLEGE HEALTH & SCIENCE BUILDING

ANTELOPE VALLEY COMMUNITY COLLEGE DISTRICT
3041 WEST AVENUE K
LANCASTER, CA 93536-5426

tBP project number : 20641.00
file name: S-910.DWG
drawn by: SG checked by: GB
date: JULY 30, 2009 - 100% CD

Rev:	date:	description:

THIS DRAWING AND THE DESIGNS, DEPICTIONS, IDEAS AND OTHER INFORMATION CONTAINED HEREIN CONSTITUTE UNPUBLISHED WORK OF tBP/ARCHITECTURE AND SHALL REMAIN THE PROPERTY OF tBP/ARCHITECTURE IN PERPETUITY. NO PART THEREOF SHALL BE REPRODUCED, DISCLOSED, DISTRIBUTED, SOLD, PUBLISHED OR OTHERWISE USED IN ANY WAY WITHOUT THE ADVANCED EXPRESS WRITTEN CONSENT OF tBP/ARCHITECTURE.

drawing title:
ELEVATOR GUIDERAIL SUPPORT DETAILS

drawing no.:
S-9.10
drawing of