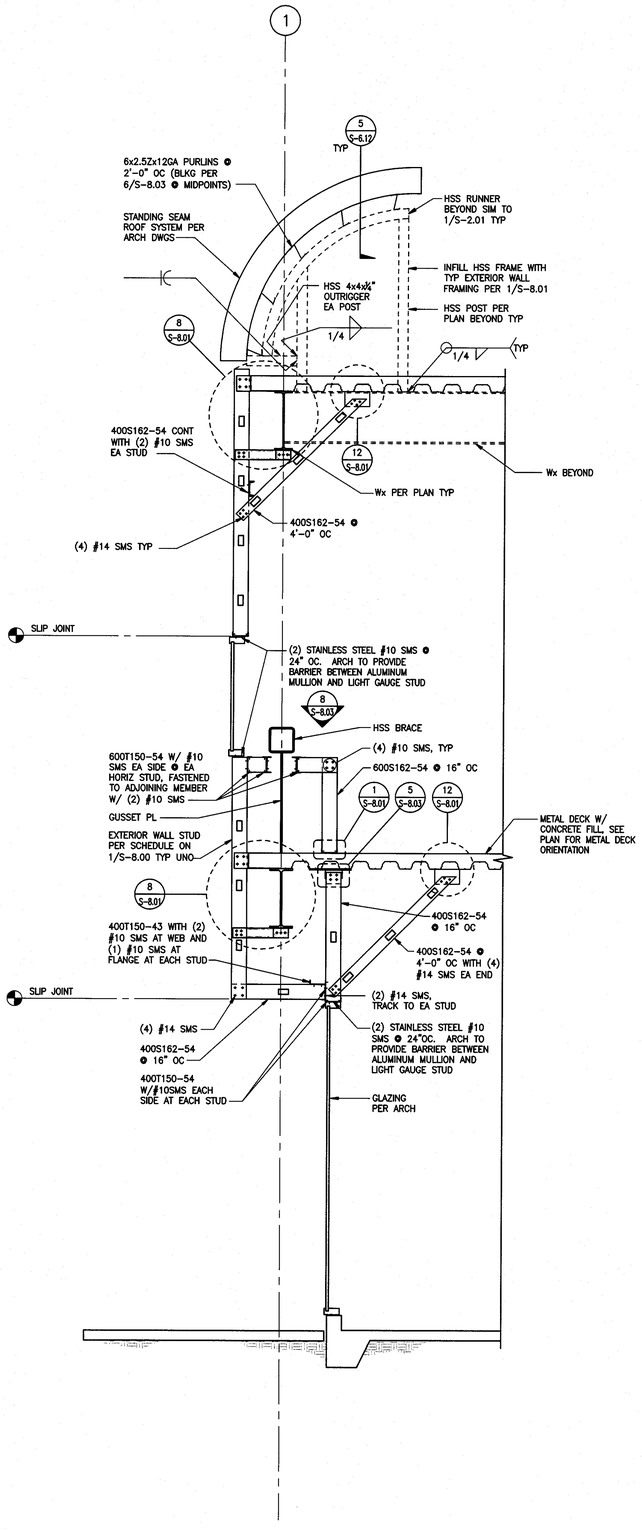

WEST WALL SECTION
SCALE: 1/2" = 1'-0"
3

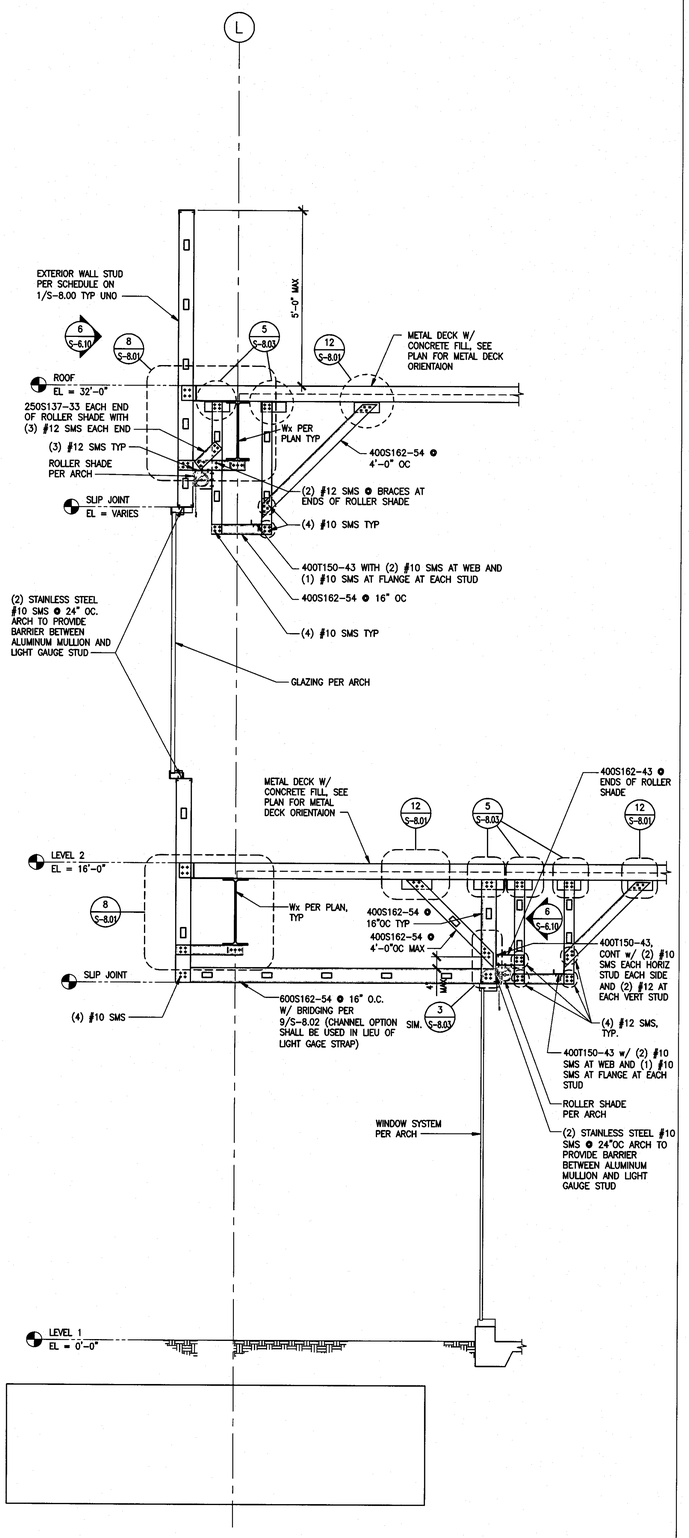

SOUTH WALL SECTION
SCALE: 1/2" = 1'-0"
2

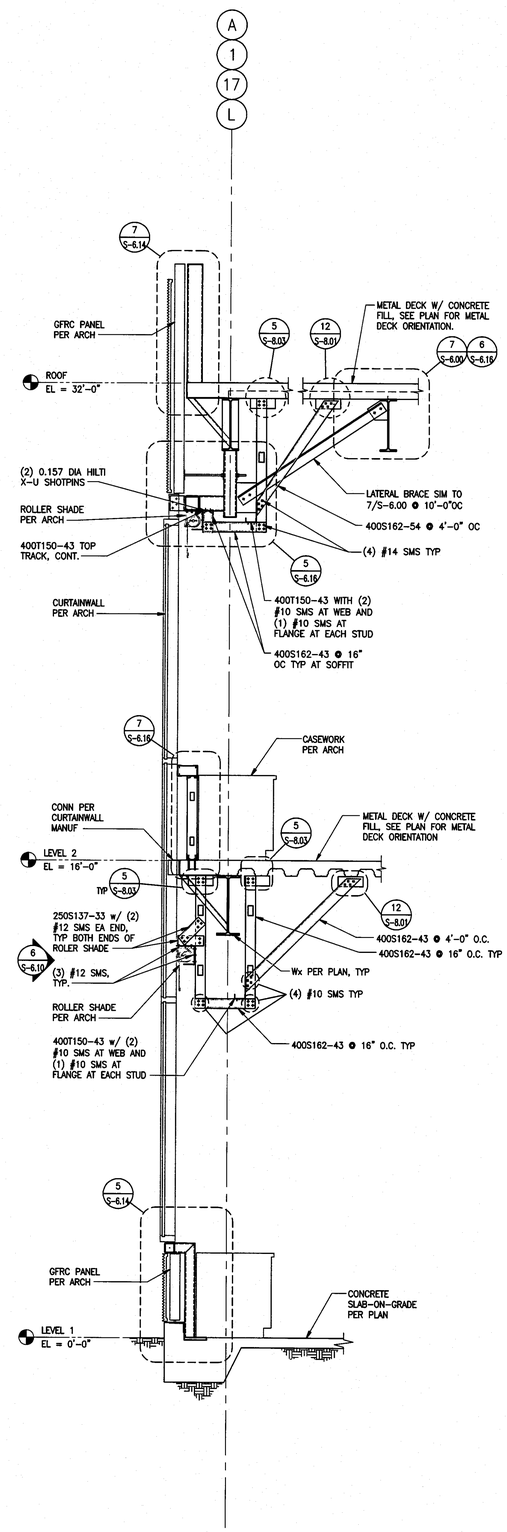

CURTAINWALL / GFRC WALL SECTION
SCALE: 1/2" = 1'-0"
1

File: W:\2007\107833 - Antelope Valley College - Health and Science Building\detail\S-701.dwg
Plotted: 9/16/09 at 1:22pm By: cvallido
XREFS: 107833_B.dwg wBESC-N-WINS2.dwg

tBP
architecture
planning
interiors
management

tBP/Architecture
5455 Wilshire Boulevard, Suite 1200
Los Angeles, CA 90036-4242
ph: 323. 556. 3788 fx: 323. 556. 3799

LICENSED ARCHITECT
STATE OF CALIFORNIA

architect

kpff Consulting Engineers
301 North Lake Avenue, Suite 550
Pasadena, California 91101
(626) 578-1121 Fax (626) 578-0921

REGISTERED PROFESSIONAL ENGINEER
STRUCTURAL
STATE OF CALIFORNIA

consultant

IDENTIFICATION STAMP
DIV. OF THE STATE ARCHITECT
OFFICE OF REGULATION SERVICES
File No. 19-C11
Appl No. 03-112201
AC RS SS CP
DATE 10.13.09

DSA Los Angeles Basin Regional Office
700 North Alameda Street, Suite 5-500
Los Angeles, California 90012
ph: 213/897-3995 fx: 213/897-3159/0726
agency

ANTELOPE VALLEY COLLEGE HEALTH & SCIENCE BUILDING

ANTELOPE VALLEY COMMUNITY COLLEGE DISTRICT
3041 WEST AVENUE K
LANCASTER, CA 93536-5426

owner

tBP project number : 20641.00
file name: S-701.DWG
drawn by: SG checked by: GD
date: JULY 30, 2009 - 100% CD

Rev:	date:	description:

THIS DRAWING AND THE DESIGNS, DEPICTIONS, IDEAS AND OTHER INFORMATION CONTAINED HEREIN CONSTITUTE UNPUBLISHED WORK OF tBP/ARCHITECTURE AND SHALL REMAIN THE PROPERTY OF tBP/ARCHITECTURE IN PERPETUITY. NO PART THEREOF SHALL BE REPRODUCED, DISCLOSED, DISTRIBUTED, SOLD, PUBLISHED OR OTHERWISE USED IN ANY WAY WITHOUT THE ADVANCED EXPRESS WRITTEN CONSENT OF tBP/ARCHITECTURE.

drawing title:
EXTERIOR WALL SECTIONS

drawing no.:
S-7.01
drawing of