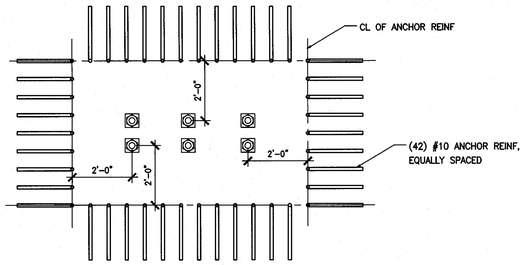

C TYPICAL BRACE FRAME CONNECTION TYPE D AND E ANCHOR REINF PLAN VIEW

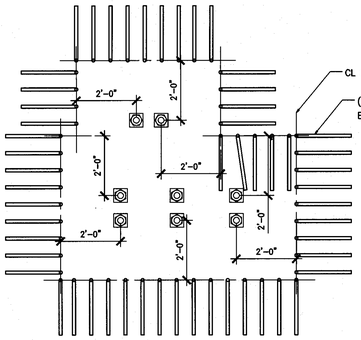

D BRACE FRAME CONNECTION TYPE D12 AND E2 ANCHOR REINF PLAN VIEW

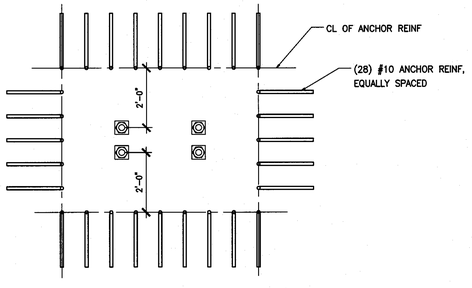

E BRACE FRAME CONNECTION TYPE G AND J ANCHOR REINF PLAN VIEW

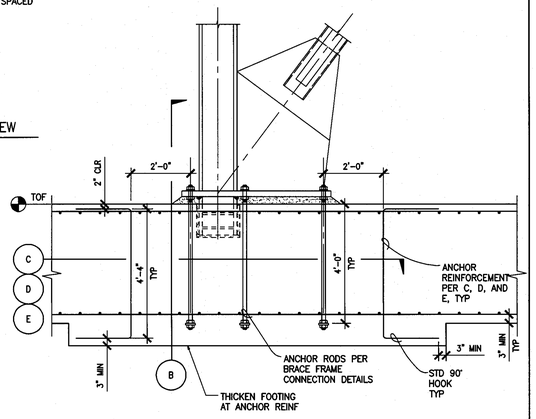

A ANCHOR REINFORCEMENT DETAIL AT BRACE FRAMES

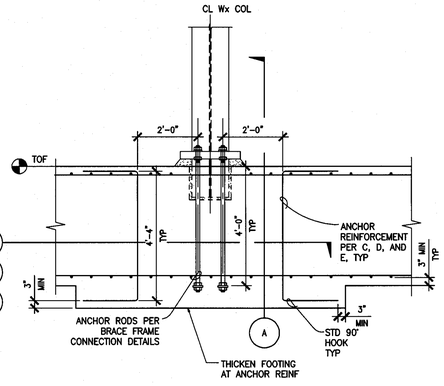

B ANCHOR REINFORCEMENT DETAIL AT BRACE FRAMES

ANCHOR REINFORCEMENT

AS NOTED | 5

NOTES:

1. ALL PLATES SHALL BE A572, GR 50 STEEL.
2. "31" INIDICATES 3 TIMES THE GUSSET PLATE THICKNESS PER SCHEDULE
3. SHOP DRAWINGS SHALL BE SUBMITTED TO SCALE FOR REVIEW AND APPROVAL. SEE S-6.04A FOR SHOP DRAWING SUMITTAL REQUIREMENTS.
4. H SHALL MATCH THE DEPTH OF THE BRACE.
5. FOR ANCHOR REINFORCEMENT, SEE 5/S-6.09 AND 1/S-5.07
6. GROUT STRENGTH SHALL BE 5000 PSI MIN. IN GROUT POCKET FOR SHEAR LUG, SELF CONSOLIDATING CONCRETE (SCC) MAY BE REQUIRED FOR PROPER CONSOLIDATION IN THE CONCRETE BLOCKOUT.
7. CONNECTIONS SHOWN SHALL CONFORM TO SEISMIC LOAD RESISTING NOTES ON S-0.00.

CONNECTION ID	PLATE THICKNESS		WELD THICKNESS		PLATE INTERFACE LENGTH (in.)	
	GUSSET (T)	STIFFENER	T1	T2	L1	L2
G1	1 1/2	1 1/2	1/2	5/8	29	71

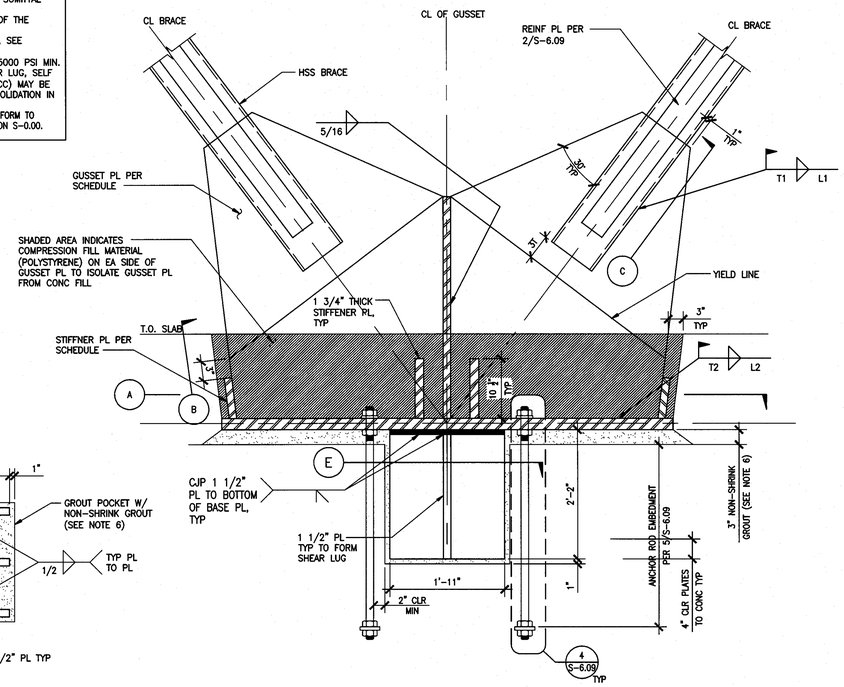

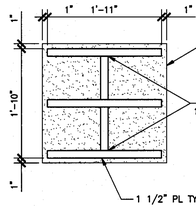

E SECTION

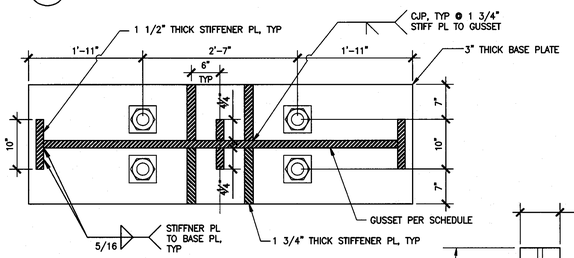

A CONNECTION TYPE G PLAN VIEW

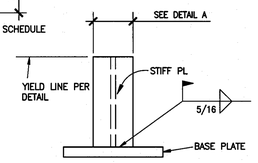

B SECTION

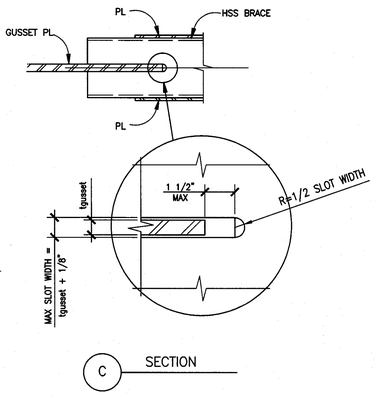

C SECTION

GUSSET CONNECTION DETAIL - TYPE G

1"=1'-0" | 1

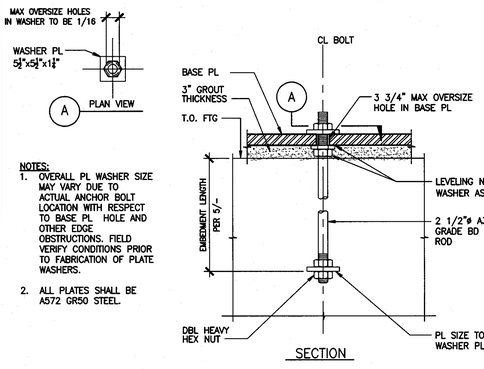

SECTION

NOTES:

1. OVERALL PL WASHER SIZE MAY VARY DUE TO ACTUAL ANCHOR BOLT LOCATION WITH RESPECT TO BASE PL HOLE AND OTHER EDGE OBSTRUCTIONS. FIELD VERIFY CONDITIONS PRIOR TO FABRICATION OF PLATE WASHERS.
2. ALL PLATES SHALL BE A572 GR50 STEEL.

ANCHOR ROD DETAIL

1"=1'-0" | 4

NOTES:

1. ALL PLATES SHALL BE A572, GR 50 STEEL.
2. FOR ANCHOR REINFORCEMENT, SEE 5/S-6.09
3. GROUT STRENGTH SHALL BE 5000 PSI MIN
4. DO NOT WELD IN "K" REGIONS OF THE WEB PER AISC.
5. CONNECTIONS SHOWN SHALL CONFORM TO SEISMIC LOAD RESISTING NOTES ON S-0.00.

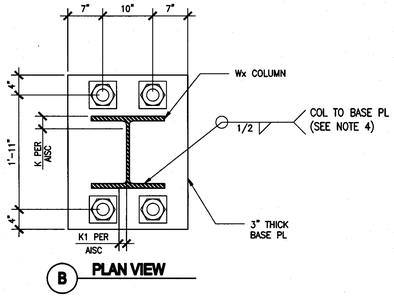

B PLAN VIEW

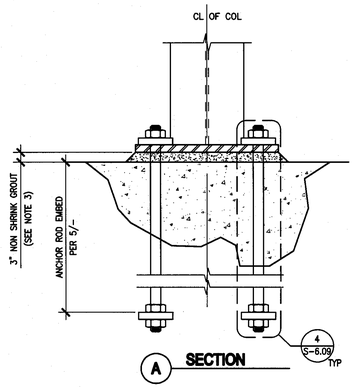

A SECTION

FRAME COLUMN BASE PLATE TYPE J1

1"=1'-0" | 3

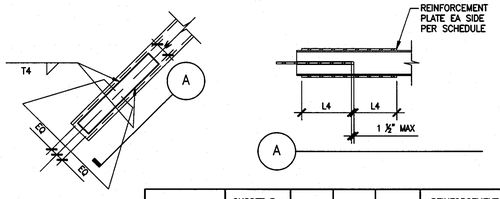

BRACE SIZE	GUSSET PL THICKNESS	T4	L4	W	REINFORCEMENT PL THICKNESS
HSS 8x8x1/2	1 1/2	1/2	15	5	3/4
HSS 10x10x5/8	1 1/2	1/2	17	6	3/4

NOTES:

1. ALL PLATES SHALL BE A572 GR 50 STEEL.
2. CONNECTIONS SHOWN SHALL CONFORM TO SEISMIC LOAD RESISTING NOTES ON S-0.00.

BRACE FRAME DETAIL

1"=1'-0" | 2

tBP architecture planning interiors management

tBP/Architecture
5455 Wilshire Boulevard, Suite 1200
Los Angeles, CA 90036-4242
ph: 323. 556. 3788 fx: 323. 556. 3799

LICENSED ARCHITECT — STEVEN C. TIBBITS — STATE OF CALIFORNIA

architect

kpff Consulting Engineers
301 North Lake Avenue, Suite 600
Pasadena, California 91101
626) 578-101 Fax (626) 578-9101

REGISTERED PROFESSIONAL ENGINEER — VIJAY A. MEHTA — 064399 — 12/31/09 — STRUCTURAL — STATE OF CALIFORNIA

consultant

IDENTIFICATION STAMP
DIV. OF THE STATE ARCHITECT
OFFICE OF REGULATION SERVICES
File No. 19-C11
Appl No. 03-112201
AC ___ RS ___ SS S/A
DATE 10.13-09

DSA Los Angeles Basin Regional Office
700 North Alameda Street, Suite 5-500
Los Angeles, California 90012
ph: 213/897-3995 fx: 213/897-3159/0726

agency

ANTELOPE VALLEY COLLEGE HEALTH & SCIENCE BUILDING

ANTELOPE VALLEY COMMUNITY COLLEGE DISTRICT
3041 WEST AVENUE K
LANCASTER, CA 93536-5426

owner

tBP project number: 20641.00
file name: S-607.DWG
drawn by: SG checked by: GD
date: JULY 30, 2009 - 100% CD

Rev:	date:	description:

THIS DRAWING AND THE DESIGNS, DEPICTIONS, IDEAS AND OTHER INFORMATION CONTAINED HEREIN CONSTITUTE UNPUBLISHED WORK OF tBP/ARCHITECTURE AND SHALL REMAIN THE PROPERTY OF tBP/ARCHITECTURE IN PERPETUITY. NO PART THEREOF SHALL BE REPRODUCED, DISCLOSED, DISTRIBUTED, SOLD, PUBLISHED OR OTHERWISE USED IN ANY WAY WITHOUT THE ADVANCED EXPRESS WRITTEN CONSENT OF tBP/ARCHITECTURE.

drawing title:
BRACE FRAME CONNECTION DETAILS

drawing no.:
S-6.09
drawing of

File: K:\2007\107833 - Antelope Valley College - Health and Science Building\adraft\S-609.dwg
Plotted: 10/13/09 1:22pm By: cvelasco
XREFS: 107833_tb.dwg