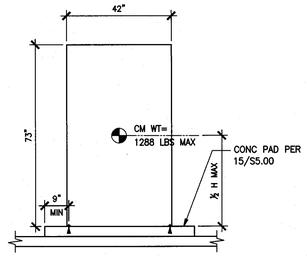

ELEVATION

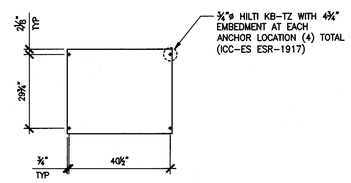

PLAN

LAB VACUUM PUMP LV-1 ANCHORAGE DETAIL 1/2"=1'-0" **7**

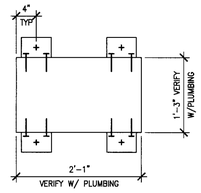

PLAN

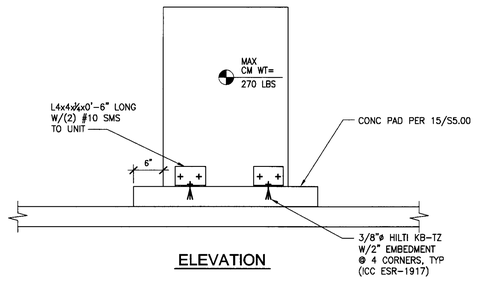

ELEVATION

(WH-1 AND WH-2) WATER HEATER ANCHORAGE 1"=1'-0" **5**

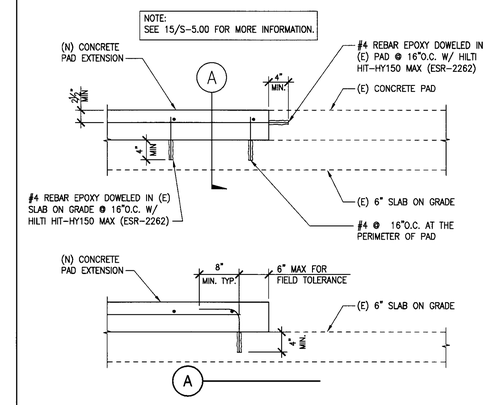

EXTENSION TO (E) CONCRETE PAD 1"=1'-0" **3**

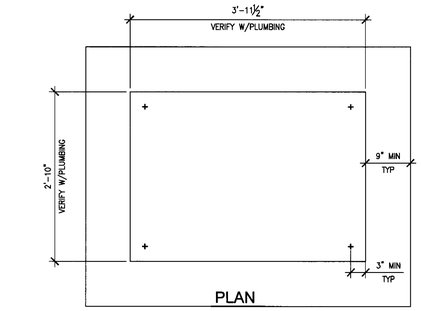

PLAN

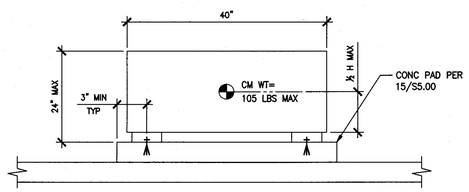

ELEVATION

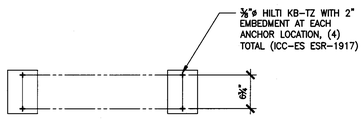

PLAN

ULTRAVIOLET STERILIZER ANCHORAGE 1"=1'-0" **8**

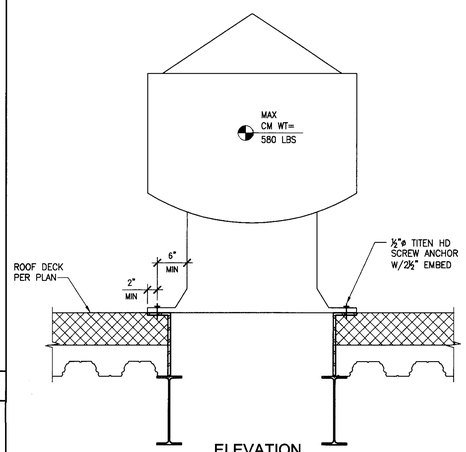

ELEVATION

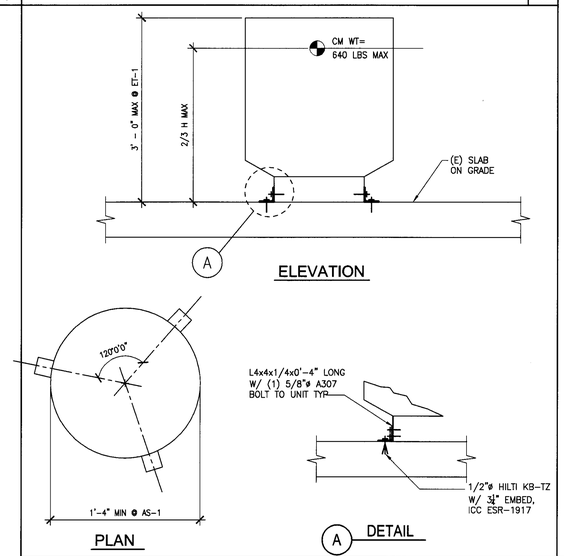

ELEVATION

PLAN

DETAIL

AS-1 AIR SEPARATOR ANCHORAGE 1"=1'-0" **4**

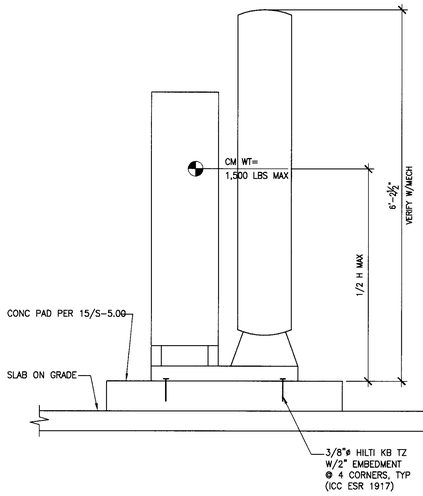

ELEVATION

(CA-1 AND LA-1) AIR COMPRESSOR ANCHORAGE 1"=1'-0" **1**

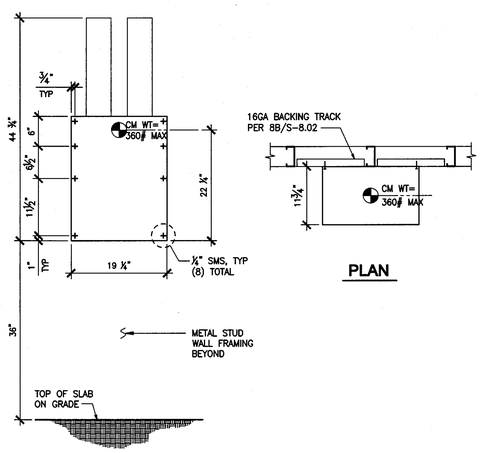

ELEVATION

PLAN

LABORATORY AIR DRYER LAD-1 ANCHORAGE DETAIL 1"=1'-0" **9**

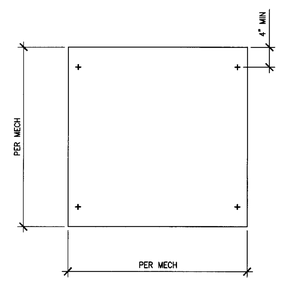

PLAN

(EF-1 TO EF-8) EXHAUST FAN ANCHORAGE DETAIL 1"=1'-0" **6**

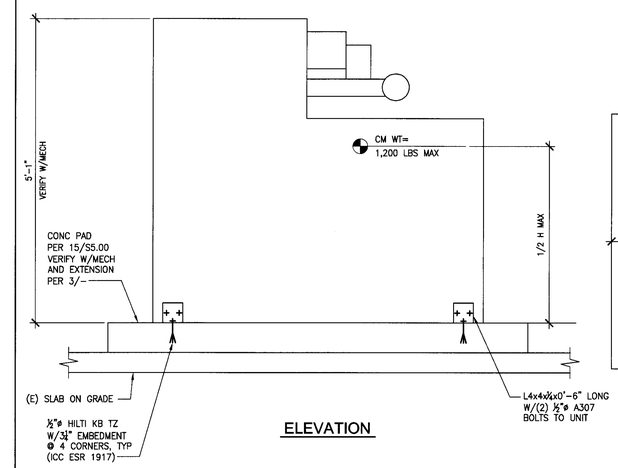

ELEVATION

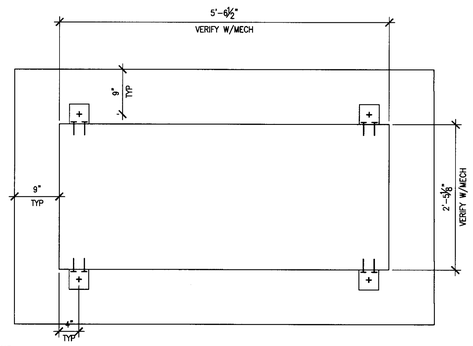

PLAN

(B1-B4) BOILER ANCHORAGE 1"=1'-0" **2**

File: K:\20061\2007\107833 - Antelope Valley College - Health and Science Building\sdraft\S-508.dwg
Plotted: 9/14/09 at 4:25pm By: JPOPONGCO
XREFS: 107833_Eb.dwg

tBP
architecture
planning
interiors
management

tBP/Architecture
5455 Wilshire Boulevard, Suite 1200
Los Angeles, CA 90036-4242
ph: 323. 556. 3788 fx: 323. 556. 3799

LICENSED ARCHITECT
No. C-23
STATE OF CALIFORNIA

architect

kpff Consulting Engineers
501 North Lake Avenue, Suite 550
Pasadena, California 91101
(626) 578-1921 Fax (626) 578-0921

REGISTERED PROFESSIONAL ENGINEER
No. S4399
Exp. 12/31/09
STRUCTURAL
STATE OF CALIFORNIA

consultant

IDENTIFICATION STAMP
DIV. OF THE STATE ARCHITECT
OFFICE OF REGULATION SERVICES
File No. 19-C11
Appl No. 03-112201
AC ___ FLS ___ SS SEP
DATE 10.13-09

DSA Los Angeles Basin Regional Office
700 North Alameda Street, Suite 5-500
Los Angeles, California 90012
ph: 213/897-3995 fx: 213/897-3159/0726

agency

ANTELOPE VALLEY COLLEGE HEALTH & SCIENCE BUILDING

ANTELOPE VALLEY COMMUNITY COLLEGE DISTRICT
3041 WEST AVENUE K
LANCASTER, CA 93536-5426

owner

tBP project number : 20641.00
file name: S-507.DWG
drawn by: SG checked by: GD
date: JULY 30, 2009 - 100% CD

Rev:	date:	description:

THIS DRAWING AND THE DESIGNS, DEPICTIONS, IDEAS AND OTHER INFORMATION CONTAINED HEREIN CONSTITUTE UNPUBLISHED WORK OF tBP/ARCHITECTURE AND SHALL REMAIN THE PROPERTY OF tBP/ARCHITECTURE IN PERPETUITY. NO PART THEREOF SHALL BE REPRODUCED, DISCLOSED, DISTRIBUTED, SOLD, PUBLISHED OR OTHERWISE USED IN ANY WAY WITHOUT THE ADVANCED EXPRESS WRITTEN CONSENT OF tBP/ARCHITECTURE.

drawing title:
EQUIPMENT DETAILS

drawing no.:
S-5.08
drawing of