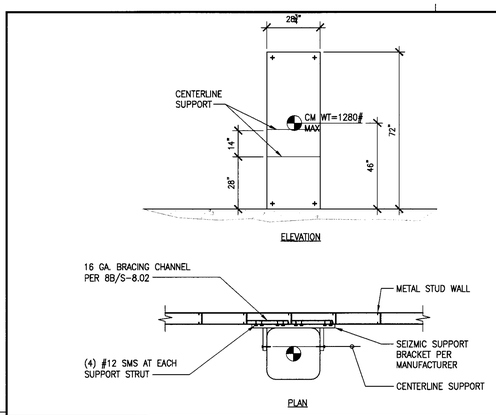

CENTRA CABINET ANCHORAGE

1"=1'-0" **10**

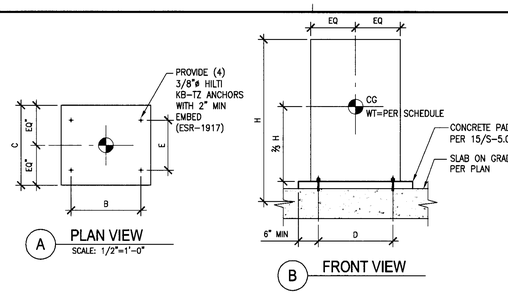

EQUIPMENT SCHEDULE						
EQUIP	WEIGHT (lbs)	H (in)	B (in)	D (in)	C (in)	E (in)
ET-1 75 KVA	643	40	29	27	22	16
ET-LS 30 KVA	351	30	23	21	17	11

NOTE: CONTRACTOR TO VERIFY ALL DIMENSIONS

ET-1 (225 KVA) AND ET-LS DETAIL

1/2"=1'-0" **6**

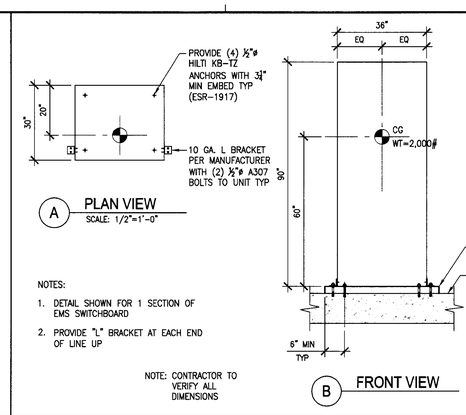

MS SWITCHBOARD

1/2"=1'-0" **4**

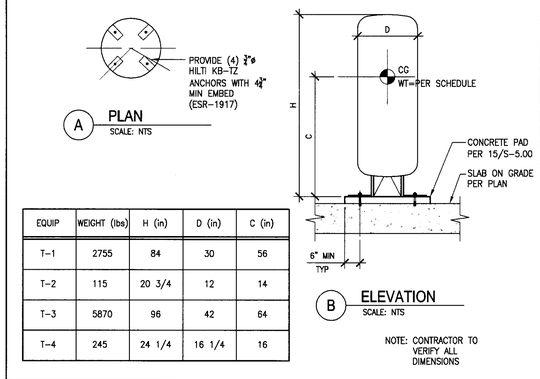

EQUIP	WEIGHT (lbs)	H (in)	D (in)	C (in)
T-1	2755	84	30	56
T-2	115	20 3/4	12	14
T-3	5870	96	42	64
T-4	245	24 1/4	16 1/4	16

WATER TANK

NTS **1**

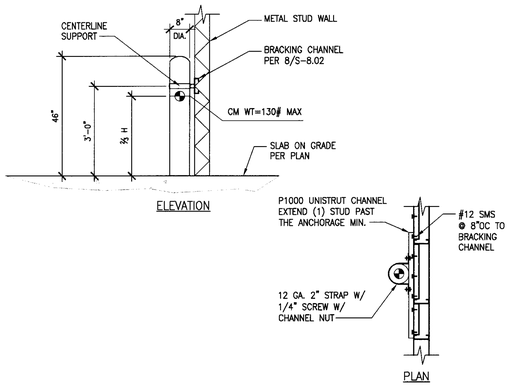

DI TANK ANCHORAGE

1/2"=1'-0" **11**

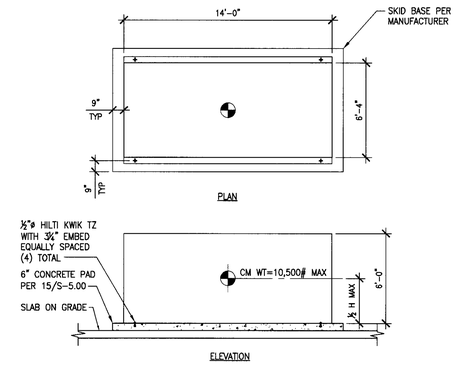

500 kw OUTDOOR GENERATOR

1/4"=1'-0" **7**

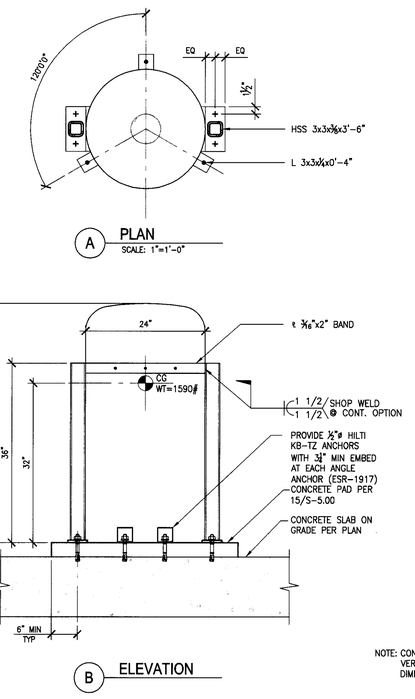

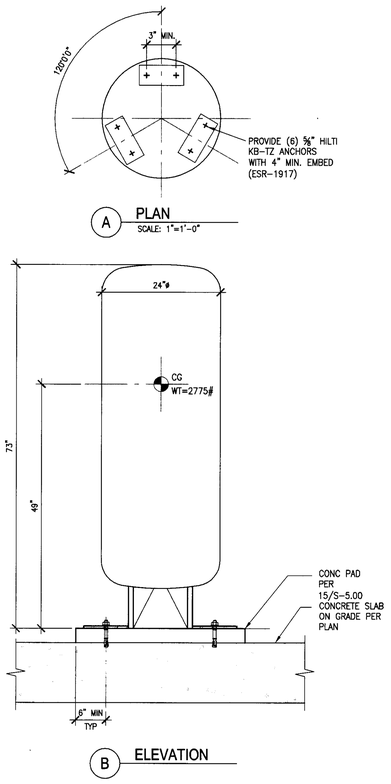

WATER SOFTENER AND BRINE TANK (WS-1)

1"=1'-0" **2**

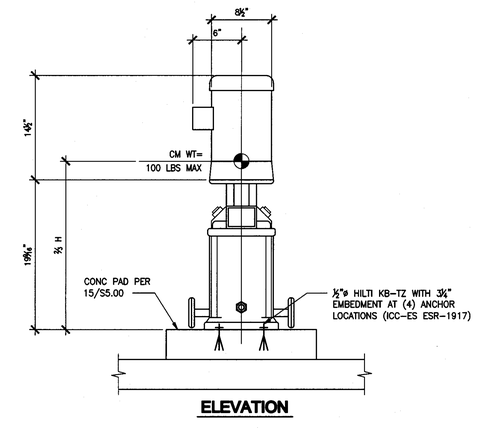

PURIFIED WATER DISBRIBUTION PUMP ANCHORAGE

1 1/2"=1'-0" **12**

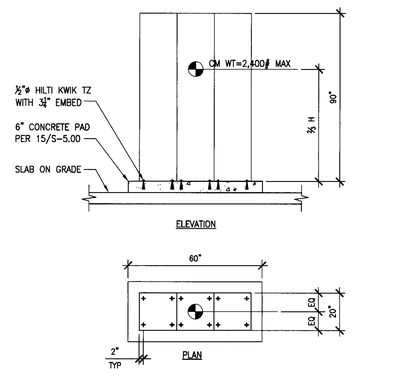

2000 kVA OUTDOOR TRANSFORMER

3/8"=1'-0" **8**

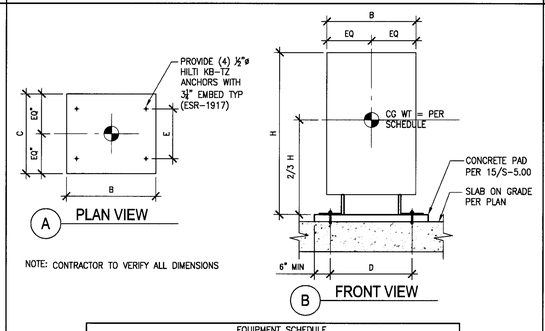

EQUIPMENT SCHEDULE						
EQUIP	WEIGHT (lbs)	H (in)	B (in)	D (in)	C (in)	E (in)
T-1 500KVA	2590	75	45	41	36	24
T-2 300KVA	1597	62	31	29	30	26

T-1 300 KVA AND T-2 300 KVA

1/2"=1'-0" **5**

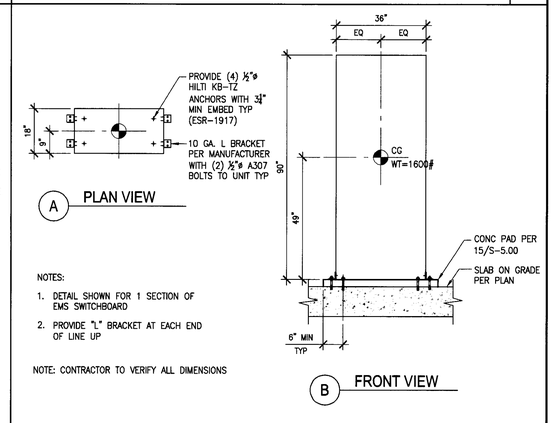

EMS SWITCHBOARD

1/2"=1'-0" **3**

File: K:\20061\2007\107833 - Antelope Valley College - Health and Science Building\sdraft\S-509.dwg
Plotted: 12/14/09 at 6:23pm By: JPROPUNCOD
Version: 13 S-5.09.dwg

tBP
architecture
planning
interiors
management
tBP/Architecture
5455 Wilshire Boulevard, Suite 1200
Los Angeles, CA 90036-4242
ph: 323. 556. 3788 fx: 323. 556. 3799
LICENSED ARCHITECT
STATE OF CALIFORNIA
architect

kpff Consulting Engineers
301 North Lake Avenue, Suite 500
Pasadena, California 91101
(626) 578-1121 Fax (626) 578-1131
REGISTERED PROFESSIONAL ENGINEER
STATE OF CALIFORNIA
consultant

IDENTIFICATION STAMP
DIV. OF THE STATE ARCHITECT
OFFICE OF REGULATION SERVICES
File No. 19-C11
Appl No. 03-112201
AC ____ FLS ____ SS ____
DATE 10 12 08

DSA Los Angeles Basin Regional Office
700 North Alameda Street, Suite 5-500
Los Angeles, California 90012
ph: 213/897-3995 fx: 213/897-3159/0726
agency

ANTELOPE VALLEY COLLEGE HEALTH & SCIENCE BUILDING

ANTELOPE VALLEY COMMUNITY COLLEGE DISTRICT
3041 WEST AVENUE K
LANCASTER, CA 93536-5426

owner

tBP project number : 20641.00
file name: S-509.DWG
drawn by: CV checked by: GD
date: JULY 30, 2009 - 100% CD

Rev:	date:	description:

THIS DRAWING AND THE DESIGNS, DEPICTIONS, IDEAS AND OTHER INFORMATION CONTAINED HEREIN CONSTITUTE UNPUBLISHED WORK OF tBP/ARCHITECTURE AND SHALL REMAIN THE PROPERTY OF tBP/ARCHITECTURE IN PERPETUITY. NO PART THEREOF SHALL BE REPRODUCED, DISCLOSED, DISTRIBUTED, SOLD, PUBLISHED OR OTHERWISE USED IN ANY WAY WITHOUT THE ADVANCED EXPRESS WRITTEN CONSENT OF tBP/ARCHITECTURE.

drawing title:
EQUIPMENT ANCHORAGE

drawing no.:
S-5.09
drawing of