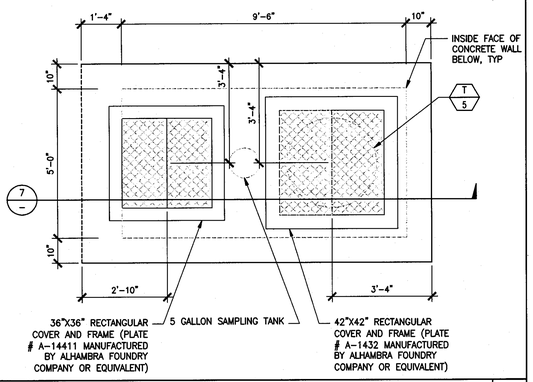

NEUTRALIZING BASIN DIMENSION PLAN 1"=1'-0" **5**

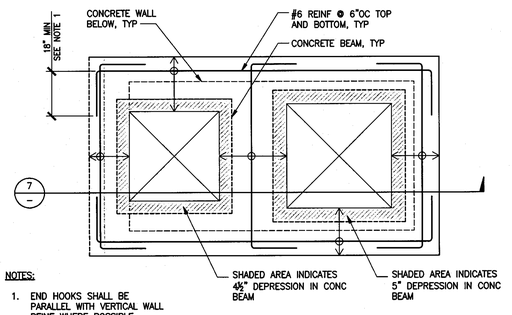

NOTES:

1. END HOOKS SHALL BE PARALLEL WITH VERTICAL WALL REINF WHERE POSSIBLE.

NEUTRALIZING BASIN REINF PLAN 1"=1'-0" **6**

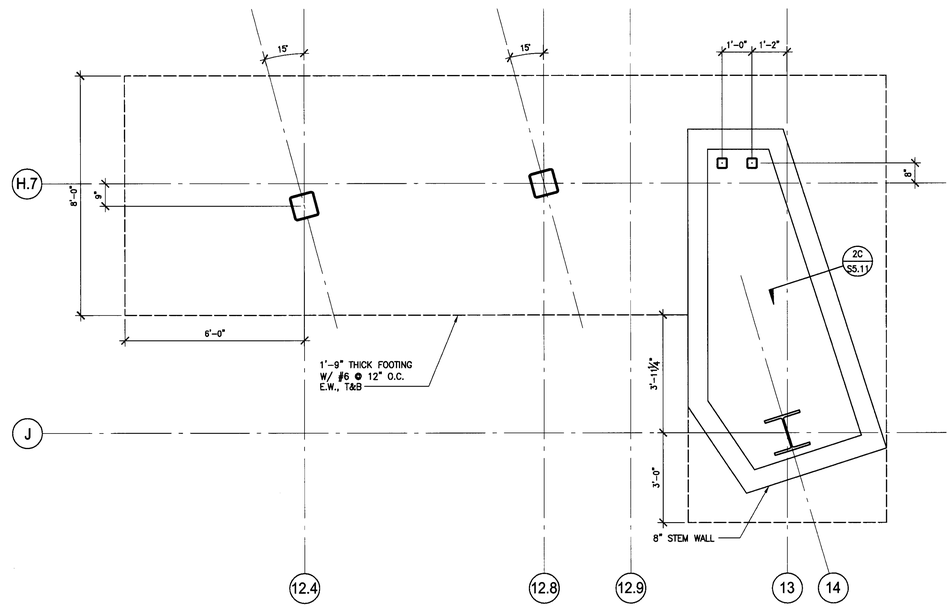

ENLARGED FOOTING DETAIL AT BRIDGE 1/2"=1'-0" **3**

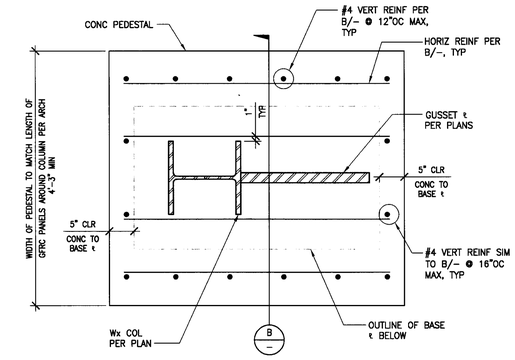

A PLAN VIEW

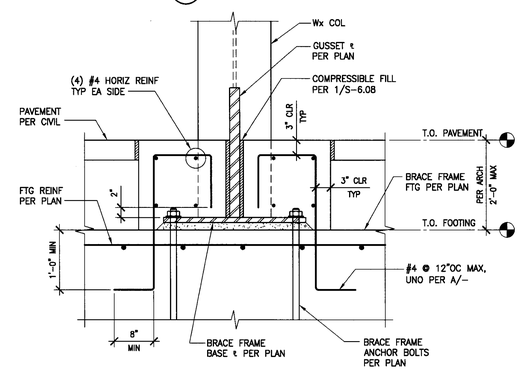

B CONC PEDESTAL SECTION

CONCRETE PEDESTAL DETAIL 1"=1'-0" **1**

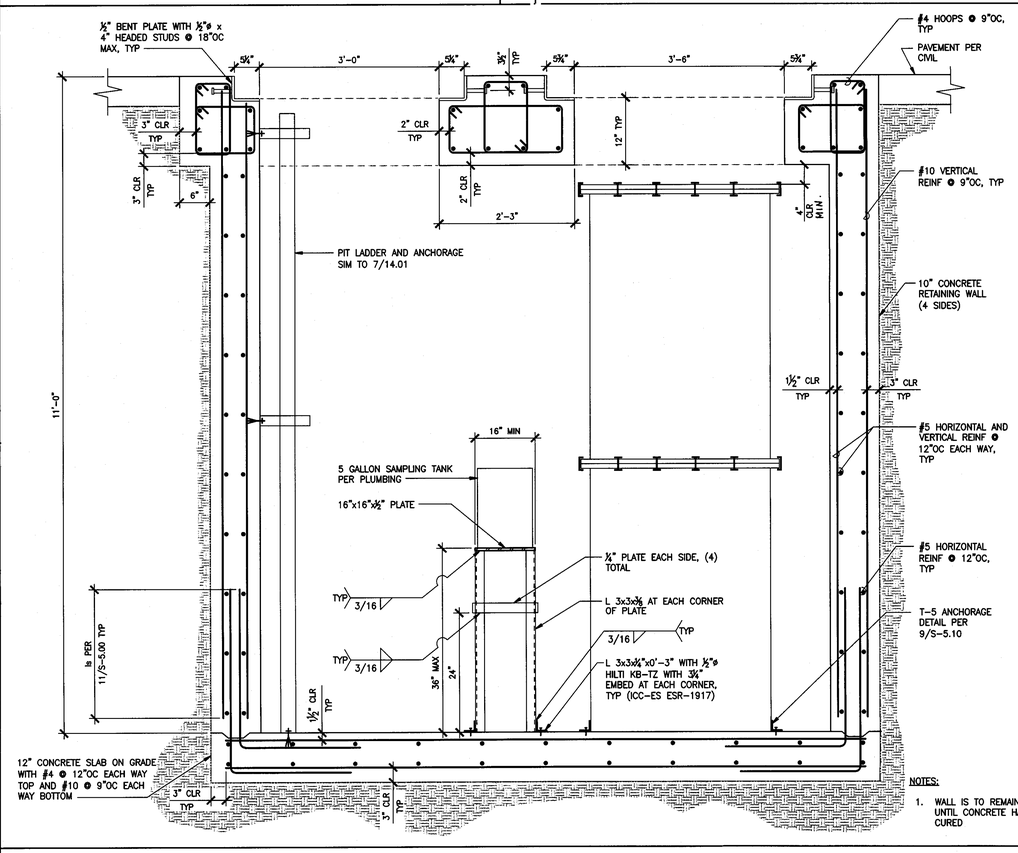

NOTES:

1. WALL IS TO REMAIN SHORED UNTIL CONCRETE HAS BEEN CURED

NEUTRALIZING BASIN SECTION 1"=1'-0" **7**

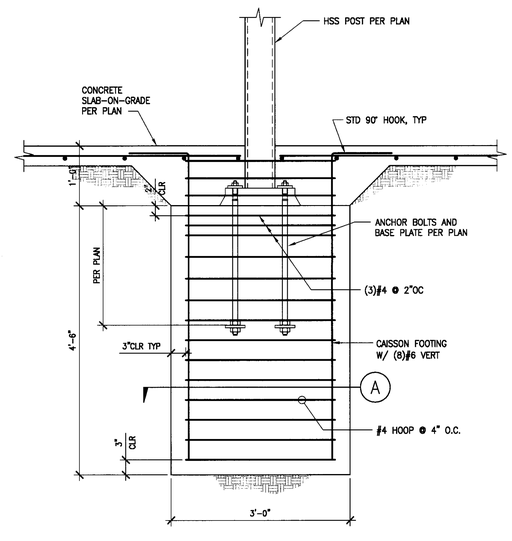

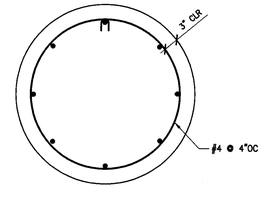

NOTES:

1. VIBRATE CONC FULL LENGTH.
2. DO NOT PAINT STEEL SURFACES ENCASED IN CONCRETE.

A SECTION

CONCRETE CAISSON DETAIL 1"=1'-0" **4**

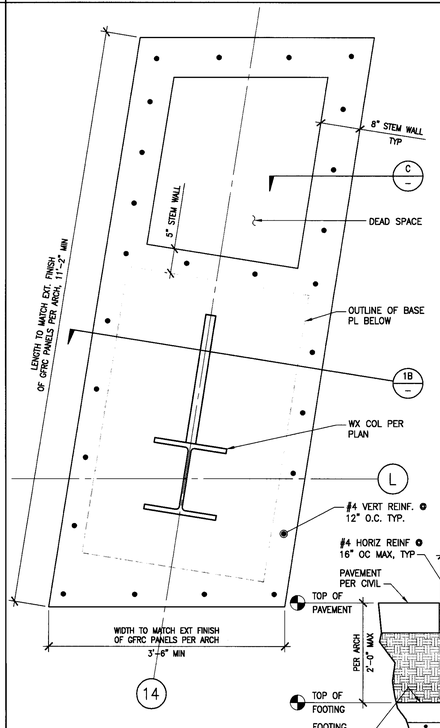

A PLAN VIEW

C SECTION @ STEM WALL

CONCRETE PEDESTAL ? STEM WALL DETAIL 1"=1'-0" **2**

tBP
architecture planning interiors management
tBP/Architecture
5455 Wilshire Boulevard, Suite 1200
Los Angeles, CA 90036-4242
ph: 323. 556. 3788 fx: 323. 556. 3799
LICENSED ARCHITECT STATE OF CALIFORNIA
architect

kpff Consulting Engineers
301 North Lake Avenue, Suite 550
Pasadena, California 91101
(626) 578-101 Fax (626) 578-1161
REGISTERED PROFESSIONAL ENGINEER STATE OF CALIFORNIA
consultant

IDENTIFICATION STAMP
DIV. OF THE STATE ARCHITECT
OFFICE OF REGULATION SERVICES
File No. 19-C11
Appl No. 03-112201
AC ___ RS ___ SS S.G.F.
DATE 10.13.09

DSA Los Angeles Basin Regional Office
700 North Alameda Street, Suite 5-500
Los Angeles, California 90012
ph: 213/897-3995 fx: 213/897-3159/0726
agency

ANTELOPE VALLEY COLLEGE HEALTH & SCIENCE BUILDING

ANTELOPE VALLEY COMMUNITY COLLEGE DISTRICT
3041 WEST AVENUE K
LANCASTER, CA 93536-5426

owner

tBP project number : 20641.00
file name: S-610.DWG
drawn by: CV checked by: GD
date: JULY 30, 2009 - 100% CD

Rev:	date:	description:

THIS DRAWING AND THE DESIGNS, DEPICTIONS, IDEAS AND OTHER INFORMATION CONTAINED HEREIN CONSTITUTE UNPUBLISHED WORK OF tBP/ARCHITECTURE AND SHALL REMAIN THE PROPERTY OF tBP/ARCHITECTURE IN PERPETUITY. NO PART THEREOF SHALL BE REPRODUCED, DISCLOSED, DISTRIBUTED, SOLD, PUBLISHED OR OTHERWISE USED IN ANY WAY WITHOUT THE ADVANCED EXPRESS WRITTEN CONSENT OF tBP/ARCHITECTURE.

drawing title:
CONCRETE DETAILS

drawing no:
S-5.11
drawing of

File: W:\2007\107833 - Antelope Valley College - Health and Science Building\sdraft\S-511.dwg
Plotted: 10/13/09 at 7:37am By: gdunson
Width: 36"
Plot Scale: 1:1