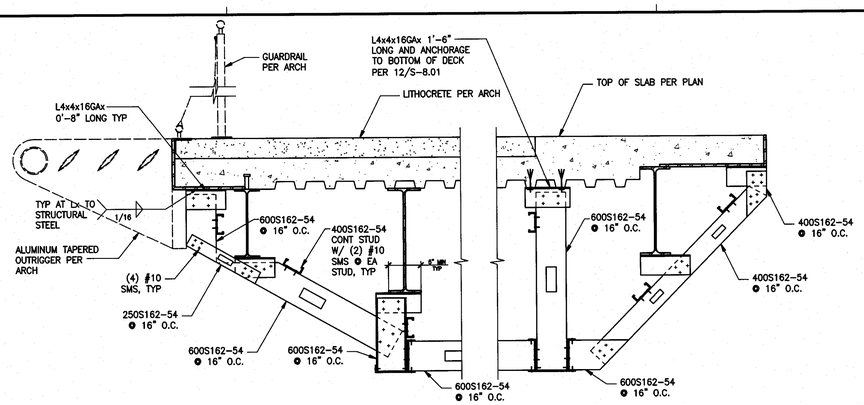

NOT USED 1 1/2"=1'-0" | 8

SECTION AT PLANETARIUM BRIDGE SOFFIT 1"=1'-0" | 3

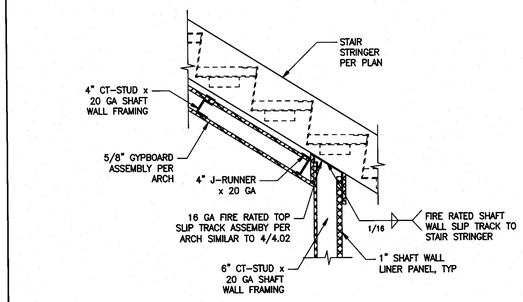

A SECTION AT TOP OF NORTH MACHINE ROOM WALL

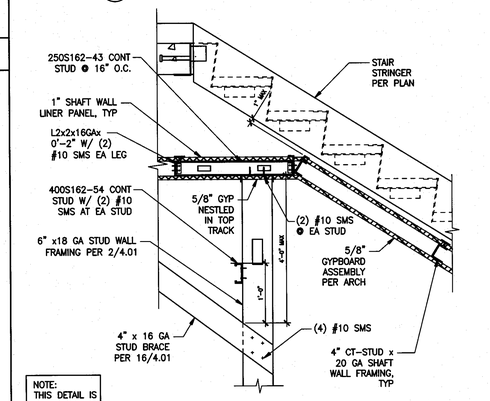

B SECTION AT TOP OF SOUTH MACHINE ROOM WALL

SHAFT WALL FRAMING AT MACHINE ROOM BELOW STAIR 2 1"=1'-0" | 1

NOT USED 3/4"=1'-0" | 9

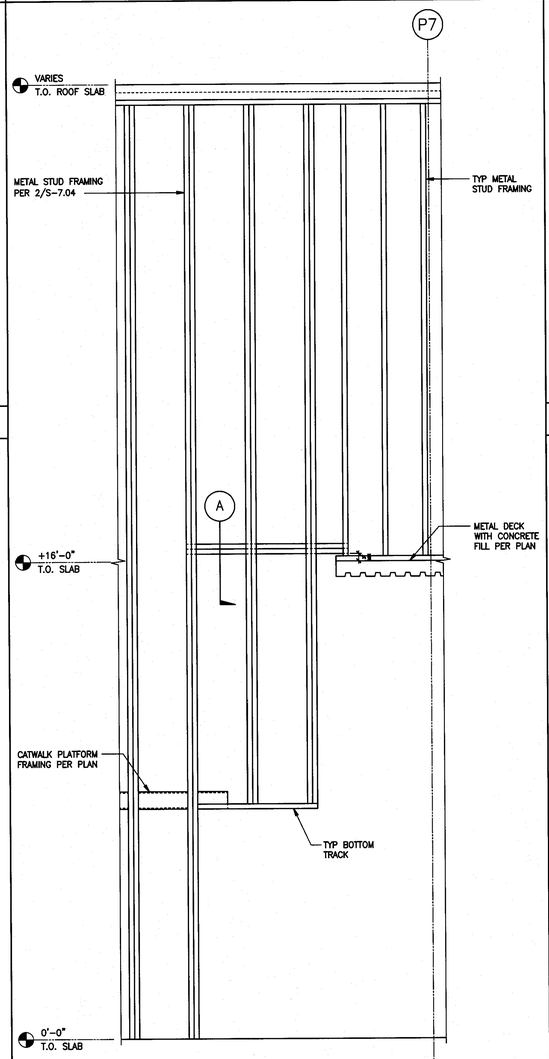

ELEVATION

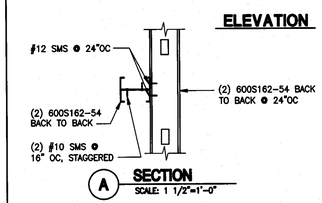

A **SECTION** SCALE: 1 1/2"=1'-0"

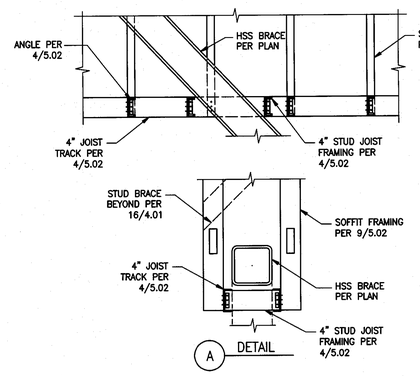

A DETAIL

SOFFIT FRAMING AT HSS BRACE PENETRATION TO SOFFIT 1"=1'-0" | 4

A DETAIL

SHAFT WALL BRACING DETAIL AT MECH SHAFT 3/4"=1'-0" | 5

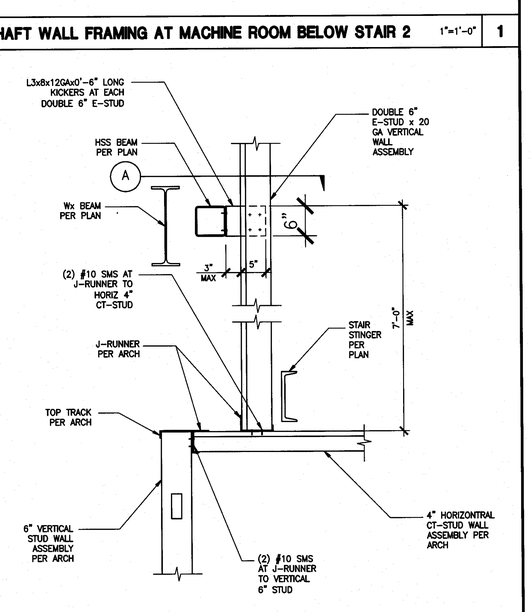

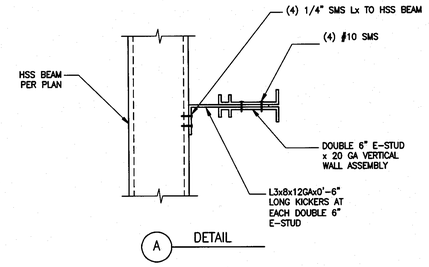

A DETAIL

STAIR 2 / ELEVATOR 2 SHAFT WALL BRACING DETAIL 1"=1'-0" | 2

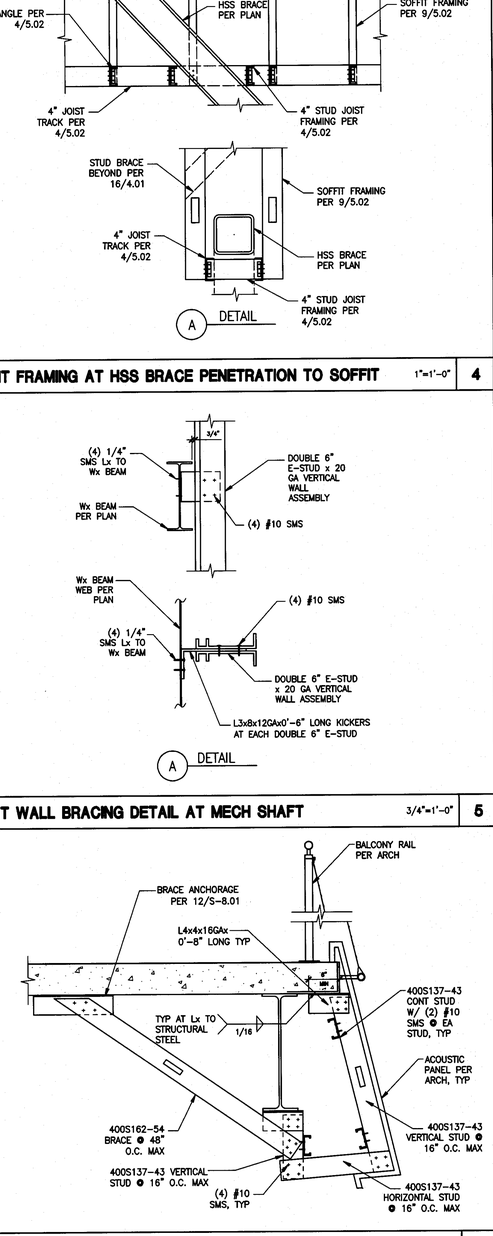

INT SOFFIT FRAMING AT SECOND FLOOR BALCONY 1 1/2"=1'-0" | 6

NOT USED 1"=1'-0" | 10

METAL STUD SUPPORT DETAIL 1/2"=1'-0" | 7

File: W:\20211\101633 - Antelope Valley College - Health and Science Building\detail\S-804.dwg
Plotted: 9/16/09 at 1:23pm By: cvallejo
XREFs: 101633_tb.dwg

tBP
architecture
planning
interiors
management

tBP/Architecture
5455 Wilshire Boulevard, Suite 1200
Los Angeles, CA 90036-4242
ph: 323. 556. 3788 fx: 323. 556. 3799

LICENSED ARCHITECT
STATE OF CALIFORNIA

architect

kpff Consulting Engineers
301 North Lake Avenue, Suite 550
Pasadena, California 91101
(626) 578-181 Fax (626) 578-9181

REGISTERED PROFESSIONAL ENGINEER
STRUCTURAL
STATE OF CALIFORNIA

consultant

IDENTIFICATION STAMP
DIV. OF THE STATE ARCHITECT
OFFICE OF REGULATION SERVICES
File No. 19-C11
Appl No. 03-112201
AC ___ RS ___ SS SCA
DATE 10.13.09

DSA Los Angeles Basin Regional Office
700 North Alameda Street, Suite 5-500
Los Angeles, California 90012
ph: 213/897-3995 fx: 213/897-3159/0726

agency

ANTELOPE VALLEY COLLEGE HEALTH & SCIENCE BUILDING

ANTELOPE VALLEY COMMUNITY COLLEGE DISTRICT
3041 WEST AVENUE K
LANCASTER, CA 93536-5426

owner

tBP project number: 20641.00
file name: S-802.DWG
drawn by: CV checked by: GO
date: JULY 30, 2009 - 100% CD

Rev:	date:	description:

THIS DRAWING AND THE DESIGNS, DEPICTIONS, IDEAS AND OTHER INFORMATION CONTAINED HEREIN CONSTITUTE UNPUBLISHED WORK OF EPWARCHITECTURE AND SHALL REMAIN THE PROPERTY OF EPWARCHITECTURE IN PERPETUITY. NO PART THEREOF SHALL BE REPRODUCED, DISCLOSED, DISTRIBUTED, SOLD, PUBLISHED OR OTHERWISE USED IN ANY WAY WITHOUT THE ADVANCED EXPRESS WRITTEN CONSENT OF EPWARCHITECTURE.

drawing title:
ENLARGED SECTIONS

drawing no.:
S-8.04
drawing of