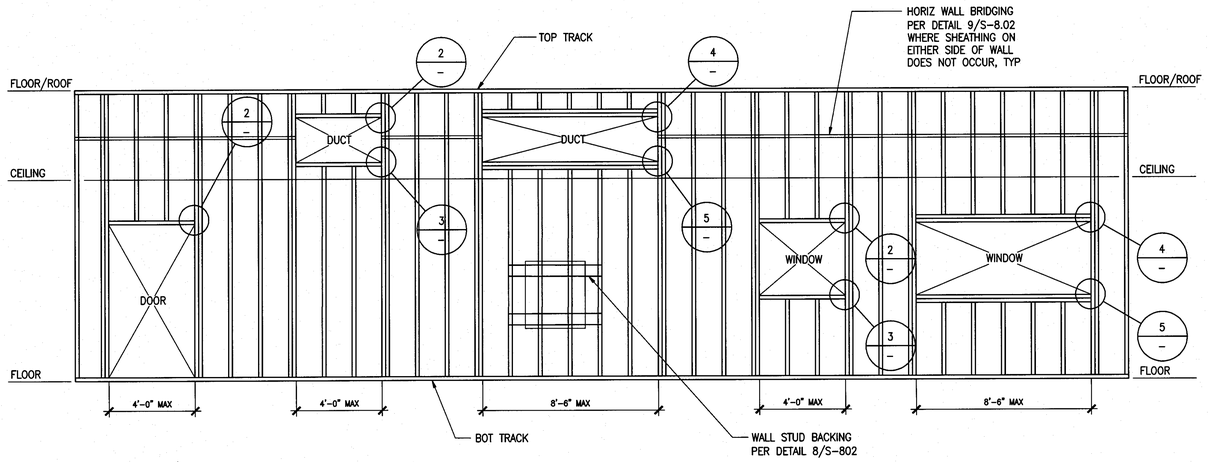

TYPICAL WALL STUD PROPERTIES		DEPTH	THICKNESS	FLANGE WIDTH	SSMA DESIGNATION	GROSS AREA (in^2)	EFFECTIVE Sxx (in^3)	EFFECTIVE Ixx (in^4)
6" WALL STUDS @ 16" OC MAX								
TYP EXTERIOR WALL INT. WALL @ CORRIDOR, HEAVY WALL HUNG ITEMS, ETC	C-STUD	6"	16 GA	1 5/8"	600S162-54	0.556	0.927	2.860
	TOP TRACK	6"	16 GA	1 1/2"	600T150-54	0.509	0.714	2.464
	BOTTOM TRACK	6"	16 GA	1 1/2"	600T150-54	0.509	0.714	2.464
	DEFLECTION TRACK	6"	16 GA	2"	600T200-54	0.565	0.759	2.759
	NESTED TRACK	6"	16 GA	2 1/2"	600T250-54	0.622	0.733	3.447
6" WALL STUDS @ 16" OC MAX								
TYP INTERIOR WALL	C-STUD	6"	20 GA	1 3/8"	600S137-33	0.318	0.510	1.582
	TOP TRACK	6"	20 GA	1 1/2"	600T150-33	0.311	0.335	1.385
	BOTTOM TRACK	6"	20 GA	1 1/2"	600T150-33	0.311	0.335	1.385
	DEFLECTION TRACK	6"	18 GA	2"	600T200-43	0.451	0.565	2.076
	NESTED TRACK	6"	18 GA	2 1/2"	600T250-43	0.537	0.918	3.082

NOTES: 1. ALL METAL STUD FRAMING SHALL BE IN COMPLIANCE WITH SSMA – STEEL STUD MANUFACTURERS ASSOCIATION (ICC ER-4943P).
2. ALL METAL STUD MEMBERS SHALL COMPLY WITH THE MINIMUM SECTION PROPERTIES AS INDICATED IN THE SCHEDULE (UNO).
3. SEE ARCHITECTURAL DRAWINGS FOR DEPTH AND LOCATION OF WALLS.
4. AT WALL MOUNT EQUIPMENT USE 16GA WALL STUD PROPERTIES.

TYPICAL EXTERIOR METAL STUD WALL FRAMING

3/8"=1'-0" | 1

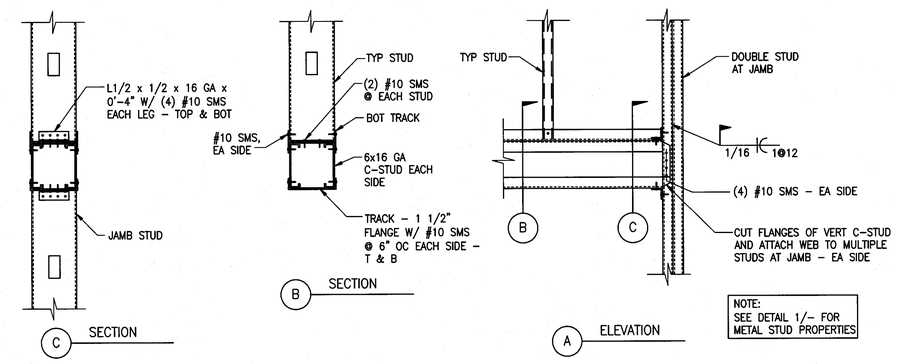

EXTERIOR HEADER AND JAMB DETAIL FOR 8'-6" MAX OPENING

1 1/2"=1'-0" | 4

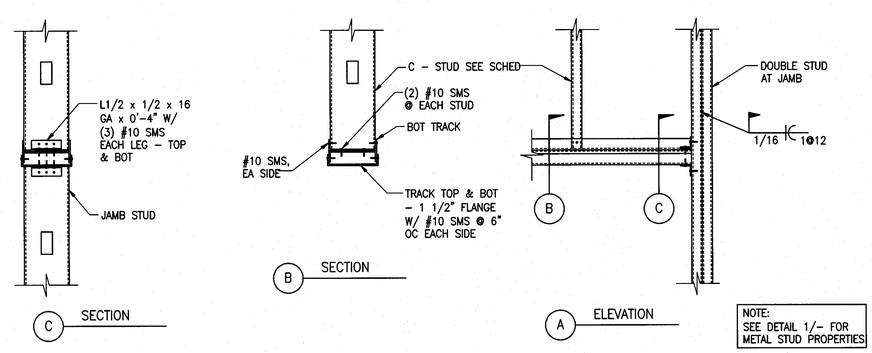

EXTERIOR HEADER AND JAMB DETAIL FOR 4'-0" MAX WALL OPENING

1 1/2"=1'-0" | 2

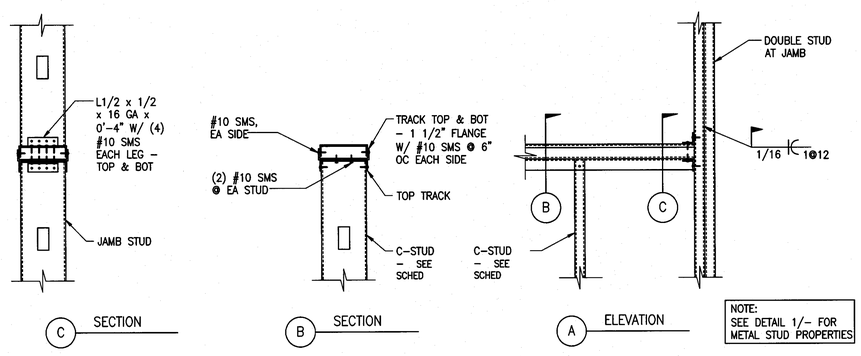

EXTERIOR SILL AND JAMB DETAIL FOR 8'-6" MAX WALL OPENING

1 1/2"=1'-0" | 5

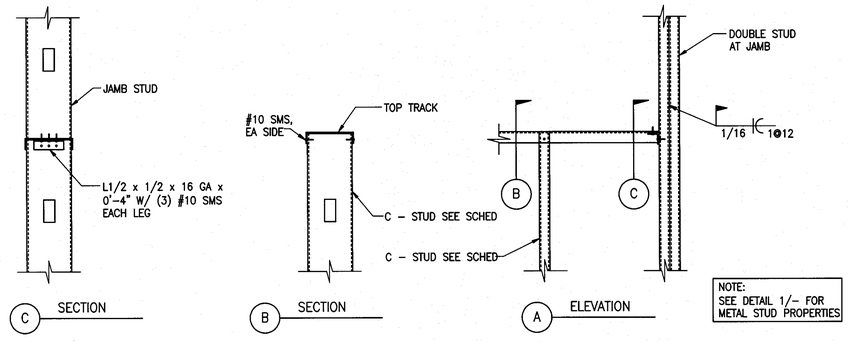

EXTERIOR SILL AND JAMB DETAIL FOR 4'-0" MAX WALL OPENING

1 1/2"=1'-0" | 3

File: W:\2007\107833 – Antelope Valley College – Health and Science Building\sdraft\S-800.dwg
Plotted: 9/16/09 at 1:23pm By: cvallejo
DWG: 107833_S-800.dwg

tBP
architecture
planning
interiors
management

tBP/Architecture
5455 Wilshire Boulevard, Suite 1200
Los Angeles, CA 90036-4242
ph: 323. 556. 3788 fx: 323. 556. 3799

LICENSED ARCHITECT
STATE OF CALIFORNIA

architect

kpff Consulting Engineers
301 North Lake Avenue, Suite 550
Pasadena, California 91101
626) 578-1921 Fax (626) 578-0481

REGISTERED PROFESSIONAL ENGINEER
No. 64399
Exp. 12/31/09
STRUCTURAL
STATE OF CALIFORNIA

consultant

IDENTIFICATION STAMP
DIV. OF THE STATE ARCHITECT
OFFICE OF REGULATION SERVICES
File No. 19-C11
Appl No. 03-112201
AC ___ FLS ___ SS SPS
DATE 10 13 09

DSA Los Angeles Basin Regional Office
700 North Alameda Street, Suite 5-500
Los Angeles, California 90012
ph: 213/897-3995 fx: 213/897-3159/0726

agency

ANTELOPE VALLEY COLLEGE HEALTH & SCIENCE BUILDING

ANTELOPE VALLEY COMMUNITY COLLEGE DISTRICT
3041 WEST AVENUE K
LANCASTER, CA 93536-5426

owner

tBP project number : 2064.00
file name: S-800.DWG
drawn by: CV checked by: GD
date: JULY 30, 2009 - 100% CD

Rev:	date:	description:

THIS DRAWING AND THE DESIGNS, DEPICTIONS, IDEAS AND OTHER INFORMATION CONTAINED HEREIN CONSTITUTE UNPUBLISHED WORK OF tBP/ARCHITECTURE AND SHALL REMAIN THE PROPERTY OF tBP/ARCHITECTURE IN PERPETUITY. NO PART THEREOF SHALL BE REPRODUCED, DISCLOSED, DISTRIBUTED, SOLD, PUBLISHED OR OTHERWISE USED IN ANY WAY WITHOUT THE ADVANCED EXPRESS WRITTEN CONSENT OF tBP/ARCHITECTURE.

drawing title:
TYPICAL METAL STUD WALL DETAILS

drawing no.:
S-8.00
drawing of