NOTE:

SHOP DRAWINGS SHALL DEPICT CONNECTION DRAWN TO SCALE WITH DIMENSIONS, ANGLES AND OTHER INFORMATION INDICATED THUS (*) FOR EACH CONNECTION INCLUDED IN THE SHOP DRAWINGS.

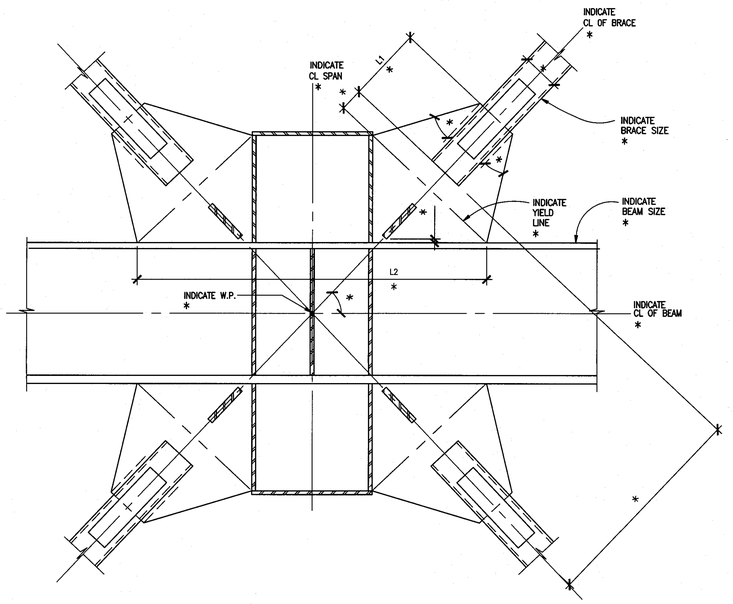

BRACE FRAME CONNECTION DETAIL 3/4"=1'-0" | 3

NOTE:

SHOP DRAWINGS SHALL DEPICT CONNECTION DRAWN TO SCALE WITH DIMENSIONS, ANGLES AND OTHER INFORMATION INDICATED THUS (*) FOR EACH CONNECTION INCLUDED IN THE SHOP DRAWINGS.

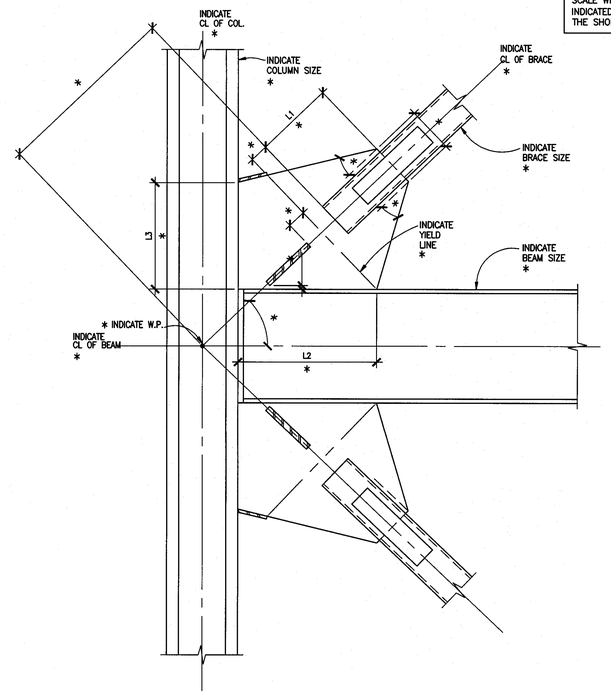

BRACE FRAME CONNECTION DETAIL 3/4"=1'-0" | 1

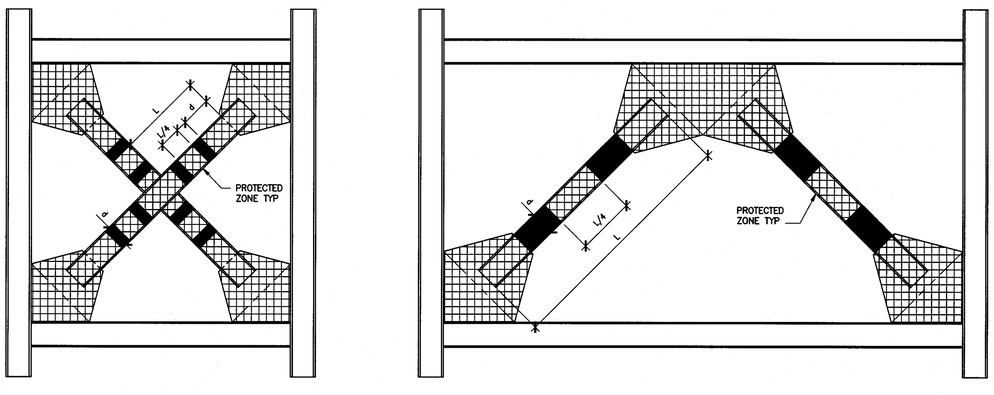

B PROTECTED ZONE OF X-BRACED FRAME

A PROTECTED ZONE OF INVERTED V BRACED FRAME

NOTES:

1. PROTECTED ZONE OF V BRACED FRAME IS SIMILAR TO INVERTED V BRACED FRAME.
2. WITHIN THE PROTECTED ZONE, DISCONTINUITIES CREATED BY FABRICATION OR ERECTION OPERATIONS, SUCH AS TACK WELDS, ERECTION AIDS, AIR-ARC GOUGING AND THERMAL CUTTING SHALL BE REPAIRED AS REQUIRED BY THE ENGINEER OF RECORD.
3. WELDED, BOLTED, SCREWED OR SHOT-IN-ATTACHMENTS FOR PERIMETER EDGE ANGLES, EXTERIOR FACADES, PARTITIONS, DUCT WORK, PIPING OR OTHER CONSTRUCTION SHALL NOT BE PLACED WITHIN THE PROTECTED ZONE.

BRACE FRAME PROTECTED ZONE 3/4"=1'-0" | 4

NOTE:

SHOP DRAWINGS SHALL DEPICT CONNECTION DRAWN TO SCALE WITH DIMENSIONS, ANGLES AND OTHER INFORMATION INDICATED THUS (*) FOR EACH CONNECTION INCLUDED IN THE SHOP DRAWINGS.

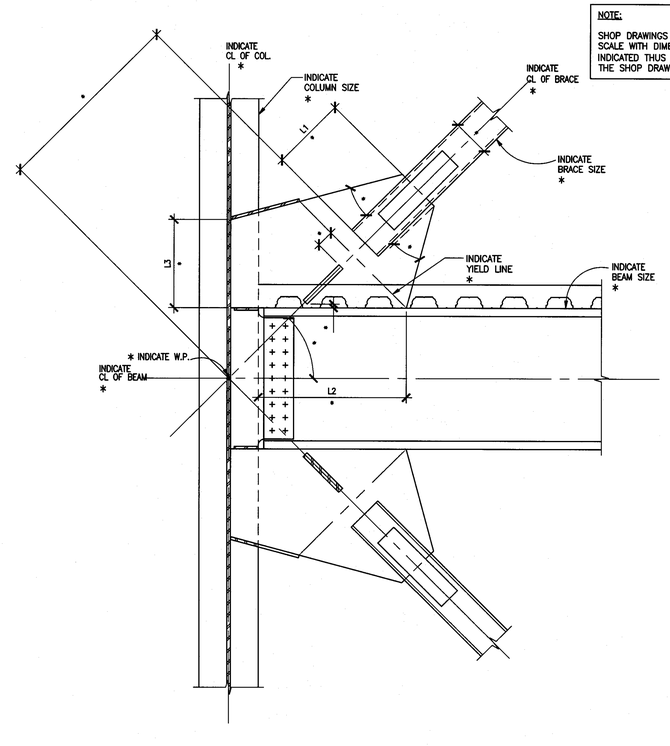

BRACE FRAME CONNECTION DETAIL 3/4"=1'-0" | 2

tBP
architecture
planning
interiors
management

tBP/Architecture
5455 Wilshire Boulevard, Suite 1200
Los Angeles, CA 90036-4242
ph: 323. 556. 3788 fx: 323. 556. 3799

LICENSED ARCHITECT
STATE OF CALIFORNIA

architect

kpff Consulting Engineers
301 North Lake Avenue, Suite 500
Pasadena, California 91101
626) 578-181 Fax (626) 578-181

REGISTERED PROFESSIONAL ENGINEER
STRUCTURAL
STATE OF CALIFORNIA

consultant

IDENTIFICATION STAMP
DIV. OF THE STATE ARCHITECT
OFFICE OF REGULATION SERVICES
File No. 19-C11
Appl No. 03-112201
AC ___ RS ___ SS ___
DATE 10 13 09

DSA Los Angeles Basin Regional Office
700 North Alameda Street, Suite 5-500
Los Angeles, California 90012
ph: 213/897-3995 fx: 213/897-3159/0726

agency

ANTELOPE VALLEY COLLEGE HEALTH & SCIENCE BUILDING

ANTELOPE VALLEY COMMUNITY COLLEGE DISTRICT
3041 WEST AVENUE K
LANCASTER, CA 93536-5426

owner

tBP project number : 2064L00
file name: S-604A.DWG
drawn by: SG checked by: GD
date: JULY 30, 2009 - 100% CD

Rev:	date:	description:

THIS DRAWING AND THE DESIGNS, DEPICTIONS, IDEAS AND OTHER INFORMATION CONTAINED HEREIN CONSTITUTE UNPUBLISHED WORK OF tBP/ARCHITECTURE AND SHALL REMAIN THE PROPERTY OF tBP/ARCHITECTURE IN PERPETUITY. NO PART THEREOF SHALL BE REPRODUCED, DISCLOSED, DISTRIBUTED, SOLD, PUBLISHED OR OTHERWISE USED IN ANY WAY WITHOUT THE ADVANCED EXPRESS WRITTEN CONSENT OF tBP/ARCHITECTURE.

drawing title:
BRACED FRAME DETAILS
SHOP DWGS REF INFO

drawing no.:
S-6.04A
drawing of

File: W:\2007\107833 - Antelope Valley College - Health and Science Building\sdraft\S-604A.dwg
Plotted: 9/16/09 at 1:22pm By: cvallejo
XREFs: 1F0533_TB.dwg