WELDING SUBMITTALS

1. PROVISION FOR WELDING HEAT EFFECTS: A SEQUENCE OF FIELD WELDING SHALL BE PLANNED TO MINIMIZE LOCKED IN STRESSES AND DISTORTION AND SHALL BE SUBMITTED TO THE ENGINEER AT TIME OF SHOP DRAWING SUBMITTAL. ANY PROPOSED DEVIATIONS FROM THE DETAILS SHOWN ON THE DRAWINGS SHALL BE APPROVED BY THE ENGINEER. THE PROCEDURES AND THE DETAILS USED SHALL RESULT IN COMPLETED CONNECTIONS, WHICH ARE IN FULL COMPLIANCE WITH THE INTENT OF THE DETAILS SHOWN ON THE DRAWINGS AND SPECIFICATIONS. THE SEQUENCE OF FIELD WELDING, BOTH IN THE JOINTS AND FRAMES AS A WHOLE, SHALL BE SUBMITTED TO THE BUILDING DEPARTMENT FOR APPROVAL. NO FIELD WELDING SHALL BE PERFORMED PRIOR TO SAID BUILDING DEPARTMENT APPROVAL.

2. A WRITTEN WELDING PROCEDURE SPECIFICATIONS (WPS) PER AWS D1.1 SHALL BE DEVELOPED BY THE FABRICATOR/ERECTOR AND REVIEWED BY THE ENGINEER AND BUILDING DEPARTMENT. ALL WELDED JOINTS SHALL BE PRE-QUALIFIED PER AWS D1.1-2006. NON PER-QUALIFIED WELDED JOINTS SHALL BE QUALIFIED BY TEST & PROCEDURE QUALIFICATION TEST RECORD INCLUDED PER AWS D1.1-2006. THE WPS SHALL INCLUDE THE WELDING PARAMETERS RECOMMENDED BY THE ELECTRODE MANUFACTURER. THE WPS SHALL INCLUDE THE FOLLOWING:

a. ALL THE NECESSARY INFORMATION REQUIRED BY THE CODE, THIS SPECIFICATION, AND ANY OTHER INFORMATION NECESSARY TO PRODUCE WELDS THAT ARE IN COMPLIANCE WITH THESE REQUIREMENTS.

b. THE APPLICABLE BASE METAL TYPES AND THICKNESS

c. THE WELDING JOINT DETAILS, INCLUDING JOINT TYPE, WELD TYPE, JOINT GEOMETRY, AND APPLICABLE DIMENSIONS. INDIVIDUAL WELD PASSES SHALL BE IDENTIFIED IN THE SKETCH AND NUMBERED TO IDENTIFY THE SEQUENCE OF THEIR DEPOSITION. THE SKETCH SHALL IDENTIFY THE MAXIMUM LAYER THICKNESS AND BEAD WIDTHS. IN NO CASE SHALL THE LAYER THICKNESSES EXCEED 1/4", NOR SHALL THE MAXIMUM BEAD WIDTH EXCEED 5/8"

d. THE APPLICABLE WELDING PROCESS.

e. THE POSITION OF WELDING.

f. THE FILLER METAL PER AWS D1.1-2006 AND ELECTRODE SPECIFICATION AND CLASSIFICATION, AS WELL AS DETAILS REGARDING SHIELDING MATERIAL USED.

g. THE MINIMUM PREHEAT REQUIREMENTS AND INTERPASS TEMPERATURES AND POST WELD HEAT TREATMENT. THE MINIMUM SPECIFIED PREHEAT SHALL MEET THE REQUIREMENTS OF AWS D1.1-2006, TABLE 4.3 AND AISC SECTION J2-7 REQUIREMENTS FOR JUMBO SECTIONS.

h. ALL APPLICABLE ELECTRICAL CHARACTERISTICS FOR THE PROCESS EMPLOYED. THE WPS SHALL CLEARLY INDICATE THE SPECIFIC VALUES REQUIRED FOR EACH WELDING PASS. THESE ELECTRICAL CHARACTERISTICS SHALL INCLUDE AT A MINIMUM THE FOLLOWING:

h1. ELECTRODE DIAMETER.

h2. TYPE OF CURRENT, AND ACCEPTABLE RANGES OF CURRENT MEASURED IN AMPERAGE. FOR WIRE FEED PROCESSES INDICATE MANUFACTURER'S RECOMMENDED MELT-OFF RATE, DEPOSITION RATE AND WIRE FEED SPEED.

h3. VOLTAGE (FOR ALL PROCESSES).

h4. ACTUAL FIELD CONDITION TRAVEL SPEED & MANUFACTURE DATA FOR TRAVEL SPEED.

h5. ELECTRODE EXTENSION (STICK OUT) FOR WIRE FEED PROCESSES.

h6. AMPERAGE VOLTAGE AND ELECTRODE EXTENSION (AS APPLICABLE) SHALL BE WITHIN THE FILLER METAL MANUFACTURER'S RECOMMENDATIONS. (COMPARE TO D1.1: 4.6.2).

i. THE DIAMETER OF THE ELECTRODES SPECIFIED ON THE WPS SHALL NOT EXCEED THE PRE-QUALIFIED LIMITS SHOWN IN AWS D1.1, PARAGRAPHS 4.6.3 FOR SMAW.

j. ALL ELECTRODES LISTED IN THE WPS SHALL BE LOW HYDROGEN TYPES.

k. A COPY OF ELECTRODE MANUFACTURER'S TECHNICAL INFORMATION SHALL BE ATTACHED TO THE WPS WITH ITS ID NO. LISTED.

WELD TESTING & INSPECTION

1. APART FROM VISUAL INSPECTION AND REVIEW OF FABRICATION AND ERECTION REPORTS OF THE FABRICATOR/ERECTOR'S OWN QUALITY CONTROL TESTING AND INSPECTION, THE OWNER'S STEEL TESTING AGENCY SHALL PERFORM THE INDICATED SHOP AND FIELD INSPECTION AND TESTING. THE STEEL TESTING AGENCY SHALL BE AWS Q.C.-1 CERTIFIED BY THE LOCAL BUILDING AUTHORITY AND SHALL PROVIDE REGISTERED INSPECTORS FOR CONTINUOUS INSPECTION OF ALL STEEL FABRICATION AND ERECTION. STRUCTURAL WELDING, HIGH STRENGTH BOLTING, ETC., SHOP AND FIELD TESTING OF WELDS AND BOLTS SHALL BE AS FOLLOWS:

A. ULTRASONIC TESTING IS REQUIRED FOR ALL (100%) PARTIAL AND COMPLETE PENETRATION WELDS. TEST GROOVE WELDING ON CONTINUITY PLATES BY ULTRASONIC TESTING AFTER BEAM FLANGE WELD CONNECTION. TESTING SHALL BE PERFORMED 24 HOURS OR MORE AFTER COMPLETION OF SMAW E7018 WELDING. WELD BACKING REMOVAL AREAS AND FILLET WELDS SHALL BE SUBJECTED TO MAGNETIC PARTICLE EXAMINATION.

B. BASE METAL THICKER THAN 1-1/2, SUBJECTED TO THROUGH THICKNESS WELD SHRINKAGE SHALL BE ULTRASONICALLY TESTED DIRECTLY BEHIND SUCH WELDS 48 HOURS OR MORE AFTER COMPLETION OF WELDING.

C. ALL WELDS SHALL BE VISUALLY INSPECTED AND PERIODICALLY MEASURED (15% MIN.).

D. CHECK BY CALIBRATED TORQUE WRENCH A MINIMUM OF ONE (1) HIGH STRENGTH BOLT AT EACH SHEAR CONNECTION. A MINIMUM OF TWO (2) BOLTS PER CONNECTION FOR CONNECTION WITH 8 BOLTS OR MORE AND A MINIMUM OF 2 BOLTS PER MOMENT FRAME BEAM SHEAR CONNECTION.

E. CHECK A MINIMUM OF 10% OF FILLET WELDS BY MAGNETIC PARTICLE (ASTM 109 METHOD). CHECK A MINIMUM OF 25% OF CONTINUITY PLATE FILLET WELDS AND BEAM FILLET WELDS (100% MOMENT IN ZONES) BY MAGNETIC PARTICLE.

F. ULTRASONICALLY TEST FOR LAMINATIONS IN COLUMN FLANGE PLATES AT ALL MOMENT CONNECTIONS AND BASE PLATES WHERE COLUMN FLANGE OR BASE PLATE THICKNESS EXCEEDS 1 ½" MAXIMUM. EVALUATE BY TESTING A MINIMUM ZONE EXTENDING 6' ABOVE AND BELOW THE CENTER LINE OF EACH BEAM FLANGE. ALL TESTING SHALL BE PERFORMED ON THE MATERIAL PRIOR TO FABRICATION, AFTER FABRICATION, AND AFTER FINAL WELDING OF THE BEAM.

G. AMPERAGE, VOLTAGE, POLARITY AND ELECTRODE STICK OUT SHALL BE VERIFIED TO BE IN COMPLIANCE WITH THE ELECTRODE MANUFACTURER'S RECOMMENDATIONS.

STRUCTURAL STEEL WELDING

1. ALL WELDING SHALL BE IN STRICT CONFORMANCE WITH THE 2007 CALIFORNIA BUILDING CODE INCLUDING:

A-WS D1.1 SECTION 6.3 FOR QUALIFIED WELDERS.
A-WS D1.1 SECTION 4.2 AND AISC SECTION J2-7 FOR JUMBO SECTIONS FOR PREHEAT AND INTERPASS TEMPERATURE REQUIREMENTS.
A-WS D1.1 SECTION 4 PARTS 8, C AND D FOR TECHNIQUE FOR ARC WELDING.
A-WS D1.1 SECTION 6 AND 8, PART D FOR INSPECTION.
CHAPTER 3 OF AISC 358-05.

2. A PRE-CONSTRUCTION MEETING BETWEEN THE ENGINEER OF RECORD, THE FABRICATOR, THE ERECTOR, THE CONTRACTOR AND THE INSPECTORS SHALL TAKE PLACE TO DISCUSS THE WELDING PROCEDURE SPECIFICATION (WPS). THE WELDING ELECTRODE MANUFACTURER'S SPECIFICATIONS SHOULD BE ATTACHED TO THE WPS ON ALL JOBS. ALL WELDERS AND INSPECTORS SHALL BE INFORMED OF AND MUST ADHERE TO THE WPS AND SHALL RETAIN A COPY.

3. THE CONTRACTOR SHALL PROVIDE THE WELDING PROCEDURE SPECIFICATION (WPS) AND DETAILED SEQUENCE OF WELDING SKETCH FOR REVIEW AND APPROVAL PRIOR TO STARTING FABRICATION. THE SEQUENCE OF WELDING SHALL BE PLANNED TO MINIMIZE LOCKED IN STRESSES AND DISTORTION.

4. ALL WELDING ELECTRODES (FILLER METAL) SHALL BE E70XX (70 KSI), U.N.O. EXCEPT E80XX (80 KSI), SHALL BE USED AT COLUMN SPLICES BETWEEN TWO HIGH STRENGTH (65 KSI) COLUMNS.

5. COMPLETE PENETRATION GROOVE WELD SHALL HAVE A FILLER METAL WITH CHARPY V-NOTCH TOUGHNESS OF 20 FT/LBS AVERAGE AT - 20 DEGREES FAHRENHEIT, AND 40 FT-LB AT 70° F WHEN LOWEST ANTICIPATED SERVICE TEMPERATURE IS AT LEAST 50° F.

6. CERTIFY CONFORMANCE TO CHARPY V-NOTCH TOUGHNESS REQUIREMENTS WITH TESTS BY AN INDEPENDENT TESTING LABORATORY FOR EACH AWS CLASSIFICATION, MANUFACTURER AND TRADE NAME. THE SIZES SPECIFIED BY AWS AS SHALL BE TESTED.

7. FIELD WELDING OF FULL PENETRATION WELDS AND PARTIAL PENETRATION WELDS AT THE STEEL MOMENT FRAME CONNECTIONS SHALL BE BY SHIELDED METAL ARC OR FLUX-CORED ARC PROCESS USING LOW HYDROGEN ELECTRODES IN CONFORMANCE WITH THE BUILDING CODE OR PROVEN EQUAL.

8. LENGTHS OF WELDS ARE EFFECTIVE LENGTHS AS SPECIFIED IN THE CALIFORNIA BUILDING CODE WHERE LENGTH OF WELD IS NOT SHOWN IT SHALL BE FULL LENGTH OF JOINT. ALL BUTT WELDS SHALL BE COMPLETE PENETRATION, UNLESS NOTED OTHERWISE.

9. ALL SHOP WELDS SHALL BE PERFORMED BY A FABRICATOR APPROVED BY DSA.

10. WELDERS SHALL BE QUALIFIED FOR THE WORK THEY WILL BE DOING AND SHALL HAVE CURRENT CERTIFICATIONS APPROVED BY DSA.

11. FACES OF FILLET WELDS EXPOSED TO VIEW SHALL HAVE AS-WELDED SURFACES THAT ARE REASONABLY SMOOTH AND UNIFORM. NO FINISHING OR GRINDING SHALL BE REQUIRED, EXCEPT WHERE CLEARANCES OR FIT OF OTHER ITEMS MAY SO NECESSITATE.

12. ALL PARTIAL AND COMPLETE PENETRATION WELDS WHICH ARE EXPOSED TO VIEW SHALL BE GROUND SMOOTH AND FLUSH WITH FINISH SURFACE OF STEEL. HOLES SHALL BE FILLED WITH WELD METAL OR BODY SOLDER AND SMOOTHED BY GRINDING OR FILING.

13. CLEAN GROOVE PREPARATION THERMAL CUTS BY GRINDING.

14. WELDS SHALL BE TERMINATED AT THE END OF A JOINT IN A MANNER THAT WILL ENSURE SOUND WELDS. WHENEVER NECESSARY THIS SHALL BE DONE BY USE OF EXTENSION BARS AND RUN OFF TABS. RUN OFF TABS USED AT BEAM FLANGE CONNECTIONS SHALL BE REMOVED AND THE ENDS OF THE WELDS SHALL BE MADE SMOOTH AND FLUSH WITH THE EDGES OF ABUTTING PARTS PER 3.12.3 OF AWS D1.1-2006. NO WELD DAMS ARE ALLOWED.

15. AFTER FULL PENETRATION WELDING, THE BOTTOM BACKING BAR IS TO BE REMOVED, THE WELD ROOT INSPECTED AND TESTED FOR IMPERFECTIONS, WHICH IF FOUND, ARE TO BE REMOVED BY BACKGOUGING TO SOUND MATERIAL & CLEANED BY GRINDING IF BACKGOUGED BY AIR ARC. THE BACKGOUGED AREA IS TO BE WELDED AND A FILLET WELD SHALL BE APPLIED TO REINFORCE THE JOINT. THE SIZE OF THE REINFORCING FILLET WELD SHALL BE EQUAL TO ¼ THE PLATE THICKNESS, BUT NOT LESS THAN 5/16 NOR MORE THAN 3/8" PER NOTE J OF FIGURE 2.4 OF AWS D1.1-2006.

16. TO ASSURE THE PROPER AMPERAGE AND VOLTAGE OF THE WELDING PROCESS, THE USE OF A HAND HELD CALIBRATED AMP AND VOLT METER SHALL BE USED. THIS EQUIPMENT SHALL BE USED BY THE FABRICATOR, ERECTOR AND THE INSPECTORS. AMPERAGE AND VOLTAGE SHALL BE MEASURED AT THE ARC WITH THIS EQUIPMENT. TRAVEL SPEED AND ELECTRODE STICK OUT SHALL BE VERIFIED TO BE IN COMPLIANCE WITH THE ELECTRODE MANUFACTURER'S RECOMMENDATIONS AND WITH THE APPROVED WPS.

17. THE FOLLOWING PROVISIONS APPLY TO ALL WELDING AT BEAM-COLUMN MOMENT CONNECTIONS:

A. MINIMUM INITIAL PREHEAT TO BE 226 DEGREES F MEASURED + - ONE FOOT FROM THE WELD JOINT. FOR JUMBO SECTIONS MINIMUM PREHEAT TO BE 350 DEGRESS F. MAXIMUM INTERPASS TEMPERATURE 600 DEGRESS F. TO BE MONITORED ON COLUMN FLANGE. MAINTAIN PREHEAT TEMPERATURE WHEN WELDING IS INTERRUPTED.

B. USE STRINGER PASSES ONLY, NO WEAVING. LAY PASSES IN HORIZONTAL LAYERS. EACH PASS SHALL BE THOROUGHLY DESLAGGED AND CLEAN BY WIRE BRUSHING.

C. PEEN EACH PASS, EXCEPT FIRST AND LAST, IMMEDIATELY AFTER DESLAGGING AND CLEAN USING A POWER SLAGGING GUN WITH A BLUNT TOOL. KEEP GUN AT RIGHT ANGLES TO WELD AND MAKE 4-5 PASSES THE LENGTH OF THE WELD WITH NO NICKS, CUTS OR DEEP INDENTATIONS BEING EVIDENT.

D. BOTH BEAM FLANGES SHOULD BE WELDED PRIOR TO ANY SUPPLEMENTAL WELDING TO THE SHEAR TAB. WELD RUN OF TABS SHALL BE REMOVED AND GROUND FLUSH TO THE BEAM FLANGE WITH MINIMAL DISTURBANCE.

18. REQUIREMENTS FOR WELDING THE BOTTOM FLANGE SHALL BE AS FOLLOWS:

A. THE ROOT PASS SHALL BEGIN IN THE CENTER OF THE JOINT, IN THE AREA OF THE WELD ACCESS HOLE, REACHING PAST THE BEAM WEB THROUGH THE COPE HOLE WHEN NEAR END OF WELDING. AFTER THE ARC IS INITIATED, TRAVEL SHALL PROGRESS TOWARD BOTH EDGES OF THE BEAM FLANGE, AND THE WELD SHALL BE TERMINATED ON THE WELD RUN OFF TAB.

B. THE HALF LENGTH ROOT PASS SHALL BE THOROUGHLY CLEANED.

C. THE START OF THE WELD IN THE WELD ACCESS HOLE AREA SHALL BE VISUALLY INSPECTED TO ENSURE FUSION, SOUNDNESS, FREE FROM SLAG INCLUSIONS AND EXCESSIVE POROSITY. THE RESULTING BEAD PROFILE SHALL BE SUITABLE FOR OBTAINING GOOD FUSION BY THE SUBSEQUENT PASS TO BE INITIATED ON THE OPPOSITE SIDE OF THE BEAM WEB. IF THE PROFILE IS NOT CONDUCIVE TO GOOD FUSION, THE START OF THE FIRST ROOT PASS SHALL BE GROUND, GOUGED CHIPPED, OR OTHERWISE PREPARED TO ENSURE ADEQUATE FUSION.

D. THE SECOND HALF OF THE WELD JOINT SHALL HAVE THE ROOT PASS APPLIED BEFORE ANY OTHER WELD PASSES ARE PERFORMED. THE ARC SHALL BE INITIATED IN THE AREA OF THE START OF THE FIRST ROOT PASS, AND TRAVEL SHALL PROGRESS TO THE END OF THE JOINT, TERMINATING ON THE WELD TAB.

E. EACH WELD LAYER SHALL BE COMPLETED ON BOTH SIDES OF THE JOINT BEFORE A NEW LAYER IS DEPOSITED.

19. ADHERE TO SECTION 4.5.2 OF AWS D1.1-2006 FOR STORAGE OF ELECTRODES.

WELD GENERAL NOTES 1"=1'-0"

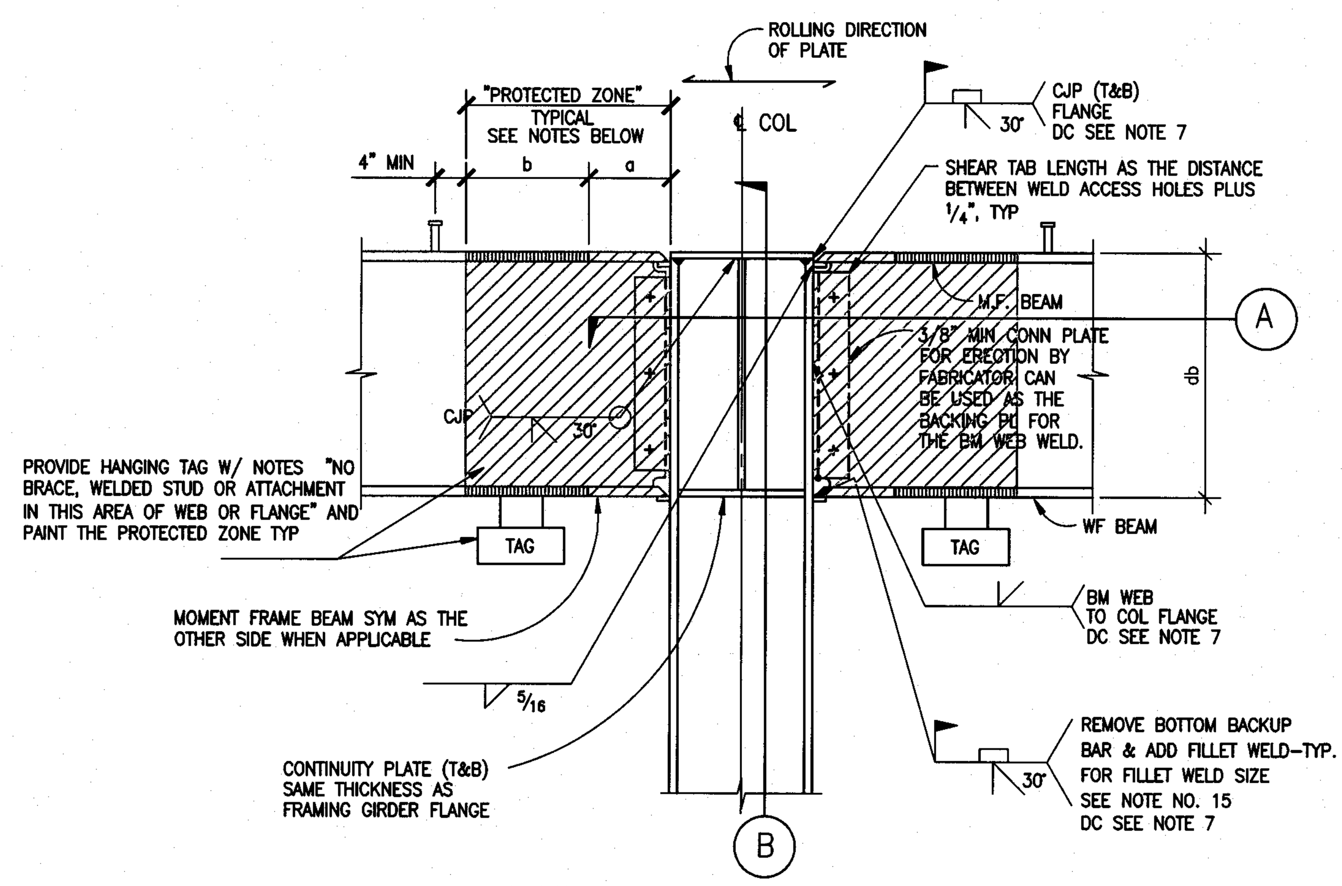

ELEVATION AT ROOF LEVEL

▷ INDICATES SPECIAL MOMENT CONNECTION

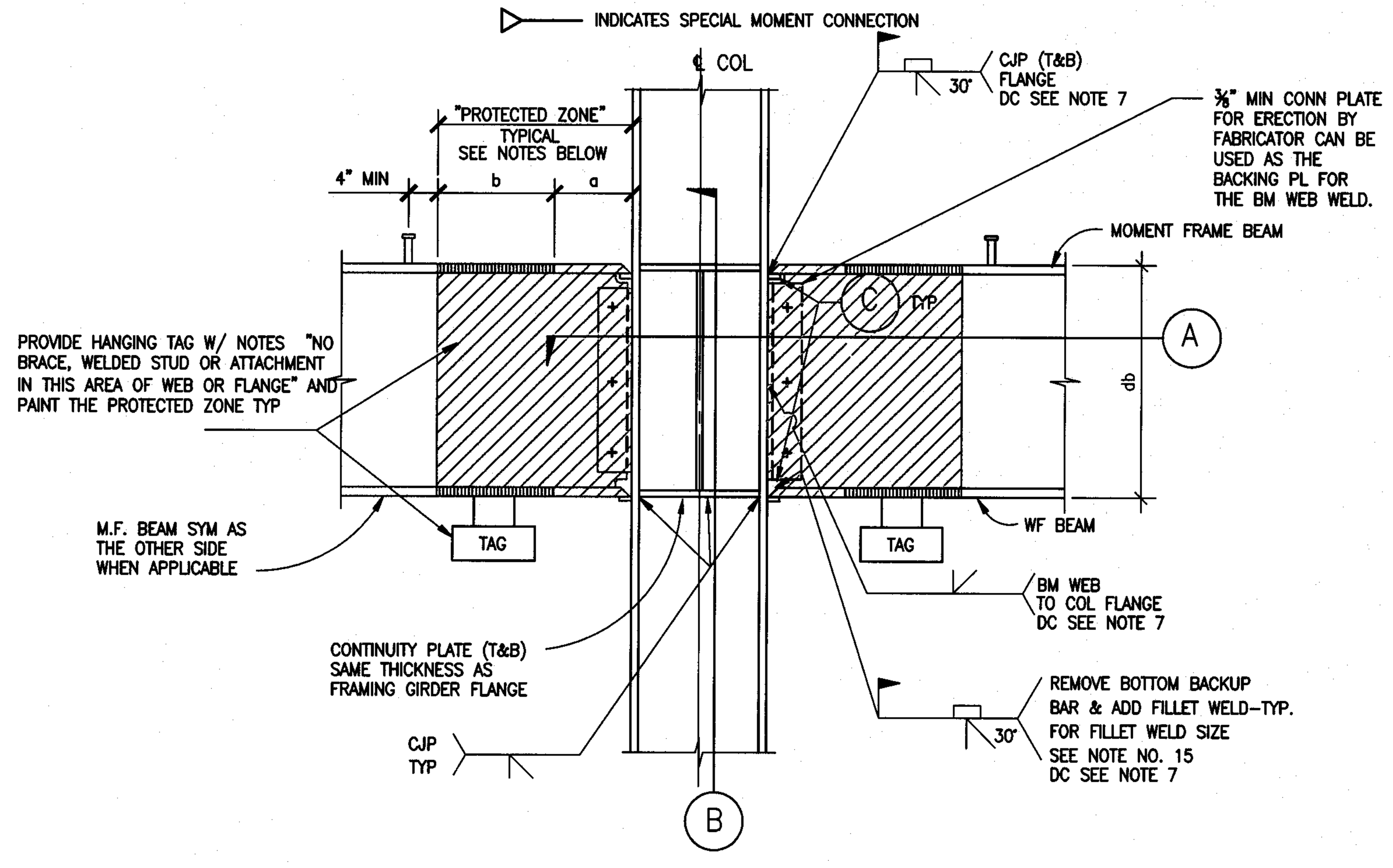

ELEVATION AT FLOOR LEVEL

▷ INDICATES SPECIAL MOMENT CONNECTION

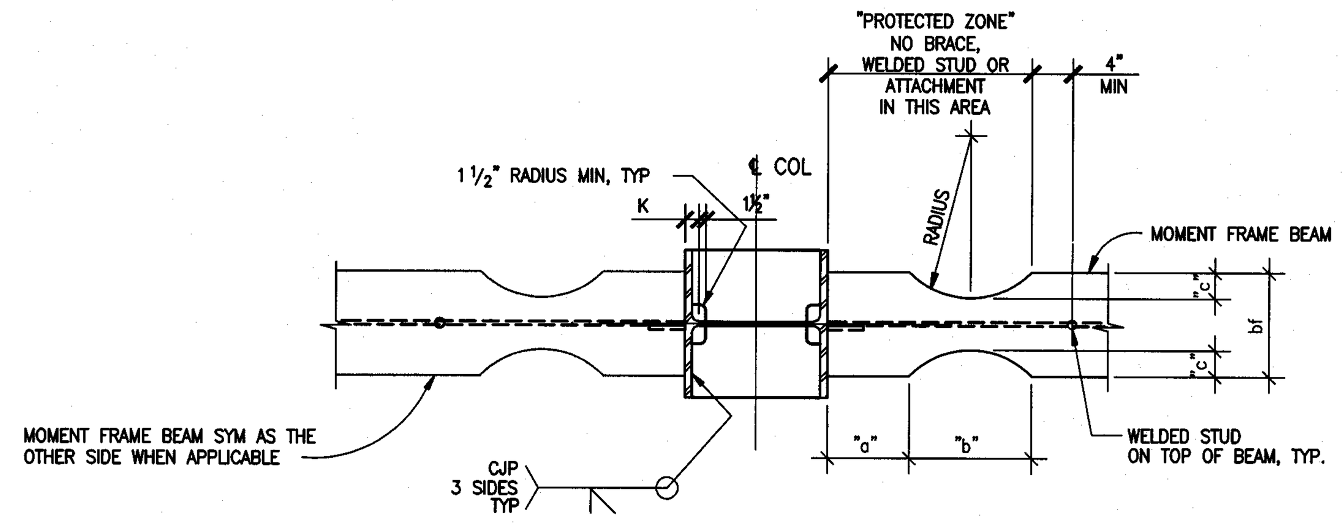

PLAN

REDUCED BEAM SECTION DETAILING					
BEAM SIZE	LEVEL	a (IN)	b (IN)	c (IN)	RADIUS (IN)
W18x143	2ND FLOOR	7.00	14.63	2.24	13.06
W24x84	ROOF/2ND FLOOR	5.64	18.1	1.80	22,84
W27x94	ROOF/2ND FLOOR	6.25	20.18	2.0	26.45
W33x201	ROOF	9.81	25.28	3.14	27.01

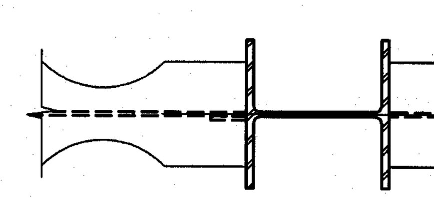

(A) SECTION

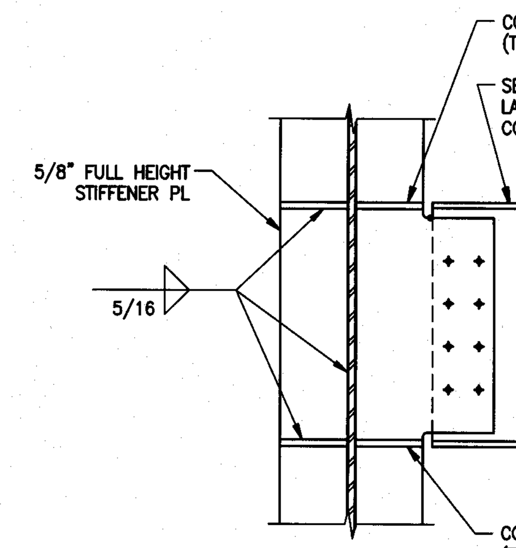

(B) SECTION

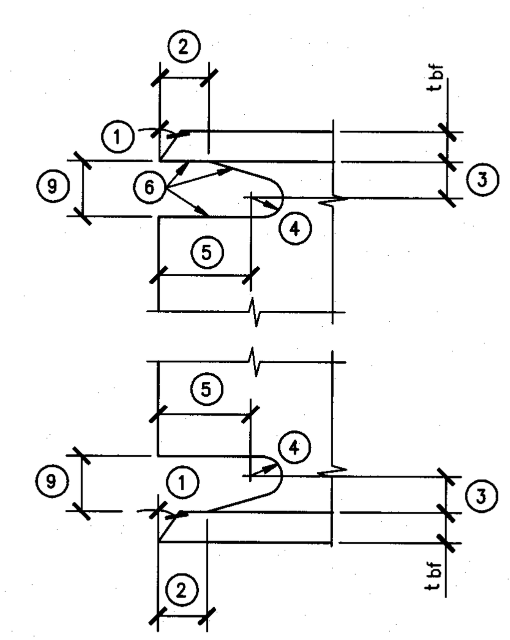

NOTES:

1. BEVEL AS REQUIRED BY AWS D1.1 FOR SELECTED GROOVE WELD PROCEDURE.
2. LARGER OF t_{bf} OR 1/2" (PLUS 1/2 t_{bf}, OR MINUS 1/4 t_{bf}) OR WIDTH OR BACKUP BAR
3. 3/4 t_{bf} TO t_{bf}, 3/4" MIN (±1/4 INCH)
4. 3/8" MIN RADIUS (PLUS NOT LIMITED, OR MINUS 0). GRIND THE THERMALLY CUT SURFACES OF ACCESS HOLES IN HEAVY SHAPES AS DEFINED IN SECTION A3.1C AND A3.1D OF AISC 360-05..
5. 3 tbf (±1/2 INCH), 1½" MIN.
6. SEE AISC 341-05 AND 358-05, FOR STEEL MOMENT-FRAME CONSTRUCTION FOR SEISMIC APPLICATIONS, FOR FABRICATION DETAILS INCLUDING CUTTING METHODS AND SMOOTHNESS REQUIREMENTS.
7. DC INDICATES DEMAND CRITICAL WELD. SEE SEISMIC LOAD RESISTING SYSTEM NOTES ON S-0.00.
8. TOLERANCES SHALL NOT ACCUMULATE TO THE EXTENT THAT THE ANGLE OF THE ACCESS HOLE CUT TO THE FLANGE SURFACE EXCEEDS 25°.
9. GREATER OF 1 ½ tw OR 1", 2" MAX. (tw = THICKNESS OF BEAM WEB)

(C) WELD ACCESS HOLE DETAIL

PROTECTED ZONE NOTES:

1. WITHIN THE PROTECTED ZONE, DISCONTINUITIES CREATED BY FABRICATION OR ERECTION OPERATIONS, SUCH AS TACK WELDS, ERECTION AIDS, AIR ARC GOUGING AND THERMAL CUTTING SHALL BE REPAIRED AS REQUIRED BY THE ENGINEER OF RECORD.
2. WELDED SHEAR STUDS AND DECKING ATTACHMENTS THAT PENETRATE THE BEAM FLANGE SHALL NOT BE PLACED ON BEAM FLANGES WITHIN THE PROTECTED ZONE. DECKING ARC SPOT WELDS AS REQUIRED TO SECURE DECKING SHALL BE PERMITTED.
3. WELDED, BOLTED, SCREWED OR SHOT-IN ATTACHMENTS FOR PERIMETER EDGE ANGLES, EXTERIOR FACADES, PARTITIONS, DUCT WORK, PIPING OR OTHER CONSTRUCTION SHALL NOT BE PLACED WITHIN THE PROTECTED ZONE.

2 **TYPICAL SPECIAL MOMENT FRAME CONNECTION** NTS

tBP
architecture planning interiors management
tBP/Architecture
5455 Wilshire Boulevard, Suite 1200
Los Angeles, CA 90036-4242
ph: 323. 556. 3788 fx: 323. 556. 3799
architect

kpff Consulting Engineers
301 North Lake Avenue, Suite 550
Pasadena, California 91101
(626) 578-1121 Fax (626) 578-9921
consultant

IDENTIFICATION STAMP
DIV. OF THE STATE ARCHITECT
OFFICE OF REGULATION SERVICES
File No. 19-C11
Appl No. 03-112201
AC ___ FLS ___ SS SRA
DATE 10 . 13 - 09

DSA Los Angeles Basin Regional Office
700 North Alameda Street, Suite 5-500
Los Angeles, California 90012
ph: 213/897-3995 fx: 213/897-3159/0726
agency

ANTELOPE VALLEY COLLEGE
HEALTH & SCIENCE BUILDING
ANTELOPE VALLEY COMMUNITY COLLEGE DISTRICT
3041 WEST AVENUE K
LANCASTER, CA 93536-5426
owner

tBP project number : 20641.00
file name: S-301.DWG
drawn by: SG checked by: GD
date: JULY 30, 2009 - 100% CD
Rev: date: description:

THIS DRAWING AND THE DESIGNS, DEPICTIONS, IDEAS AND OTHER INFORMATION CONTAINED HEREIN CONSTITUTE UNPUBLISHED WORK OF tBP/ARCHITECTURE AND SHALL REMAIN THE PROPERTY OF tBP/ARCHITECTURE IN PERPETUITY. NO PART THEREOF SHALL BE REPRODUCED, DISCLOSED, DISTRIBUTED, SOLD, PUBLISHED OR OTHERWISE USED IN ANY WAY WITHOUT THE ADVANCED EXPRESS WRITTEN CONSENT OF tBP/ARCHITECTURE.

drawing title:
MOMENT FRAME DETAILS - PLANETAIUM

drawing no.:
S-6.15
drawing of

File: W:\2007\107833 - Antelope Valley College - Health and Science Building\sdraft\S-615.dwg
Plotted: 9/16/09 at 1:22pm By: cvallido
XREFs: 107833_tb.dwg