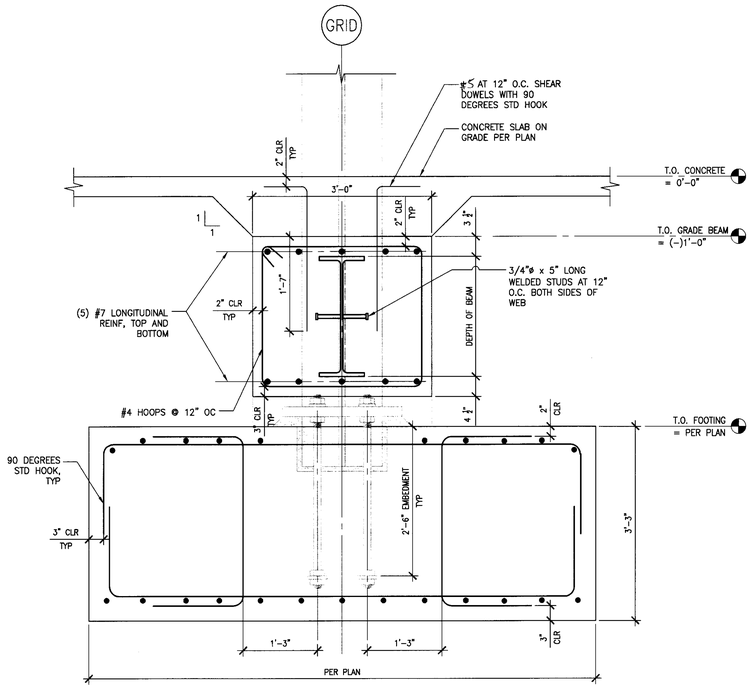

C SECTION AT SHEAR LUG AND ANCHOR REINFORCEMENT

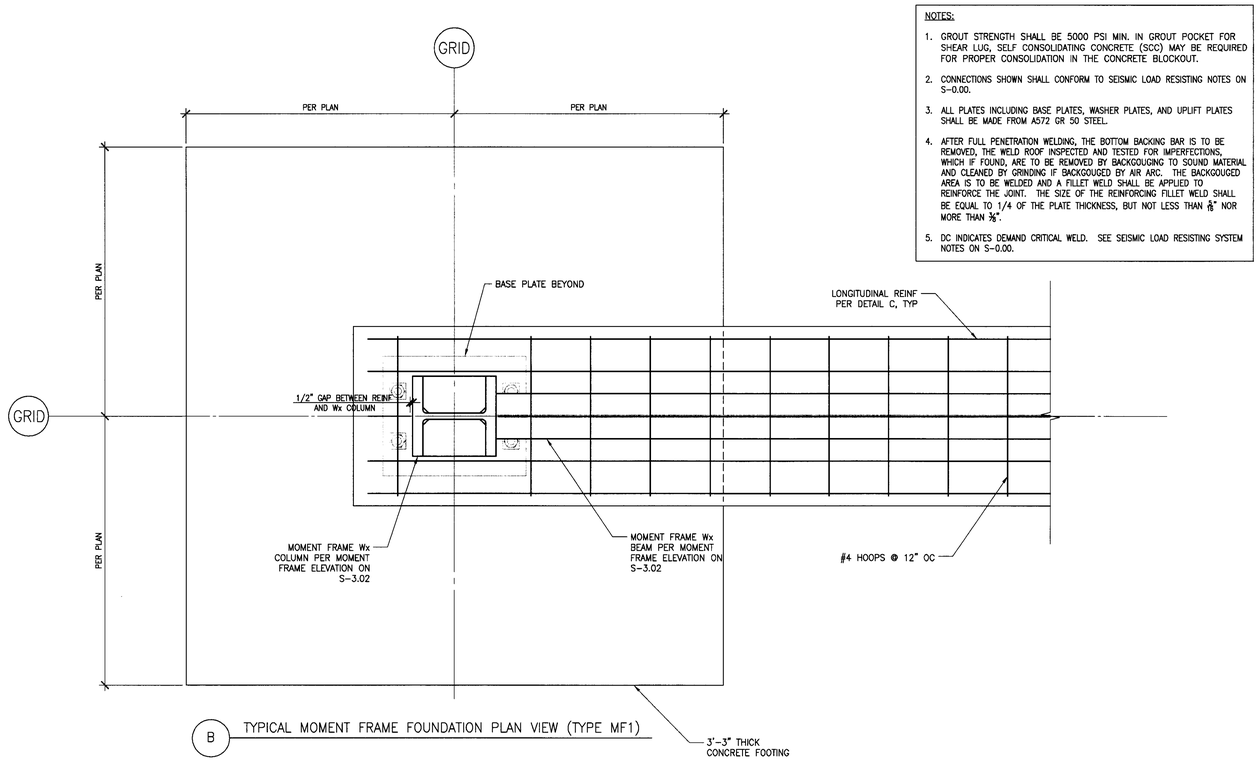

B TYPICAL MOMENT FRAME FOUNDATION PLAN VIEW (TYPE MF1)

NOTES:

1. GROUT STRENGTH SHALL BE 5000 PSI MIN. IN GROUT POCKET FOR SHEAR LUG, SELF CONSOLIDATING CONCRETE (SCC) MAY BE REQUIRED FOR PROPER CONSOLIDATION IN THE CONCRETE BLOCKOUT.
2. CONNECTIONS SHOWN SHALL CONFORM TO SEISMIC LOAD RESISTING NOTES ON S-0.00.
3. ALL PLATES INCLUDING BASE PLATES, WASHER PLATES, AND UPLIFT PLATES SHALL BE MADE FROM A572 GR 50 STEEL.
4. AFTER FULL PENETRATION WELDING, THE BOTTOM BACKING BAR IS TO BE REMOVED, THE WELD ROOF INSPECTED AND TESTED FOR IMPERFECTIONS, WHICH IF FOUND, ARE TO BE REMOVED BY BACKGOUGING TO SOUND MATERIAL AND CLEANED BY GRINDING IF BACKGOUGED BY AIR ARC. THE BACKGOUGED AREA IS TO BE WELDED AND A FILLET WELD SHALL BE APPLIED TO REINFORCE THE JOINT. THE SIZE OF THE REINFORCING FILLET WELD SHALL BE EQUAL TO 1/4 OF THE PLATE THICKNESS, BUT NOT LESS THAN 5/16" NOR MORE THAN 3/8".
5. DC INDICATES DEMAND CRITICAL WELD. SEE SEISMIC LOAD RESISTING SYSTEM NOTES ON S-0.00.

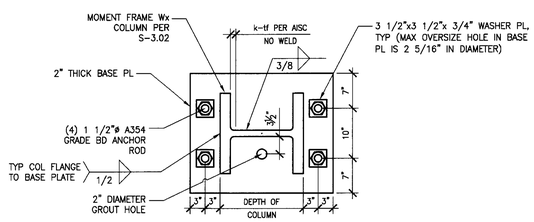

D COLUMN BASE PLATE PLAN VIEW

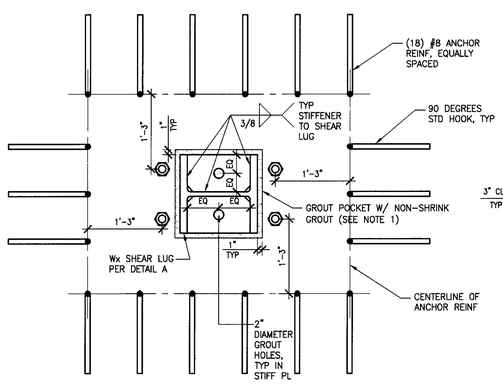

E SECTION AT SHEAR LUG AND ANCHOR REINFORCEMENT

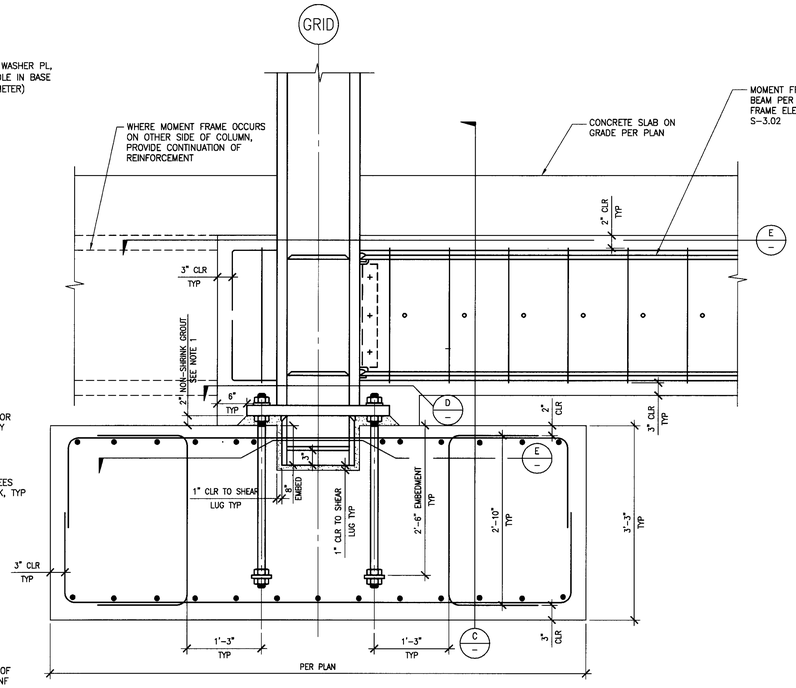

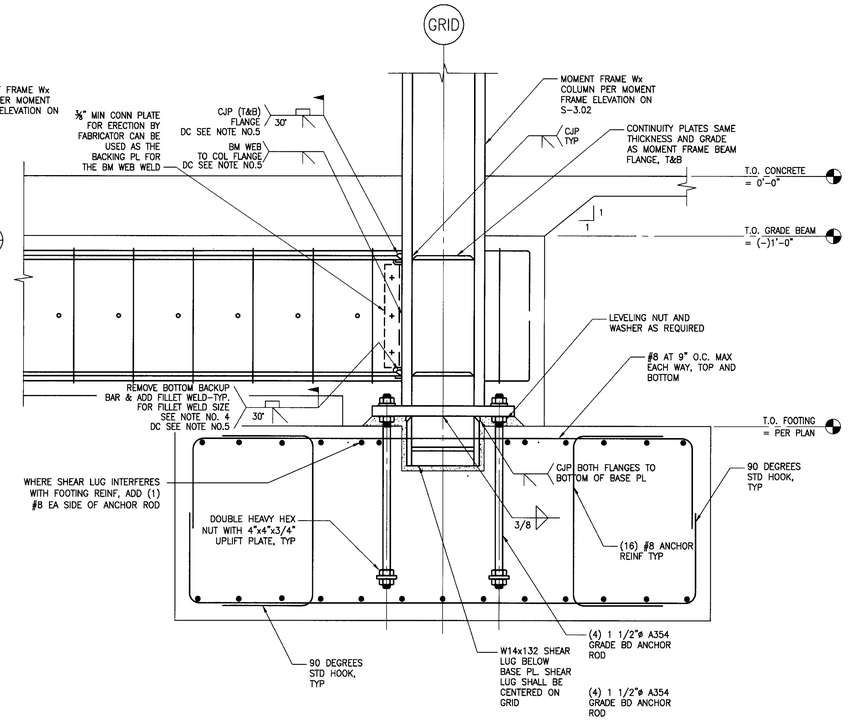

A MOMENT FRAME AT BASE ELEVATION

MOMENT FRAME FOUNDATION DETAILS 1"=1'-0" 1

tBP architecture planning interiors management
tBP/Architecture
5455 Wilshire Boulevard, Suite 1200
Los Angeles, CA 90036-4242
ph: 323. 556. 3788 fx: 323. 556. 3799
architect

kpff Consulting Engineers
301 North Lake Avenue, Suite 600
Pasadena, California 91101
(626) 578-1121 Fax (626) 578-0121
consultant

IDENTIFICATION STAMP
DIV. OF THE STATE ARCHITECT
OFFICE OF REGULATION SERVICES
File No. 19-C11
Appl No. 03-112201
AC ___ FLS ___ SS 5-26
DATE 10.13.09

DSA Los Angeles Basin Regional Office
700 North Alameda Street, Suite 5-500
Los Angeles, California 90012
ph: 213/897-3995 fx: 213/897-3159/0726
agency

ANTELOPE VALLEY COLLEGE HEALTH & SCIENCE BUILDING

ANTELOPE VALLEY COMMUNITY COLLEGE DISTRICT
3041 WEST AVENUE K
LANCASTER, CA 93536-5426

owner

tBP project number : 20641.00
file name: S-301.DWG
drawn by: SG checked by: GD
date: JULY 30, 2009 - 100% CD

Rev:	date:	description:

THIS DRAWING AND THE DESIGNS, DEPICTIONS, IDEAS AND OTHER INFORMATION CONTAINED HEREIN CONSTITUTE UNPUBLISHED WORK OF tBP/ARCHITECTURE AND SHALL REMAIN THE PROPERTY OF tBP/ARCHITECTURE IN PERPETUITY. NO PART THEREOF SHALL BE REPRODUCED, DISCLOSED, DISTRIBUTED, SOLD, PUBLISHED OR OTHERWISE USED IN ANY WAY WITHOUT THE ADVANCED EXPRESS WRITTEN CONSENT OF tBP/ARCHITECTURE.

drawing title:
MOMENT FRAME FOUNDATION DETAILS

drawing no.:
S-5.06
drawing of

File: K:\20061\20071\107833 - Antelope Valley College - Health and Science Building\sheet\S-506.dwg
Plotted: 9/14/09 at 6:25pm By: JPIOPONGCO
XREFS: XFRS3_1b.dwg