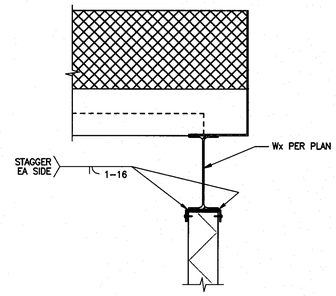

STUD FRAMING AT HIGH ROOF 1 1/2"=1'-0" | 9

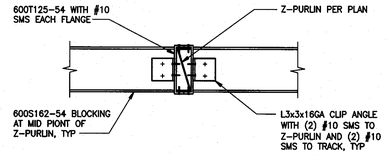

BLOCKING CONNECTION DETAIL 1 1/2"=1'-0" | 6

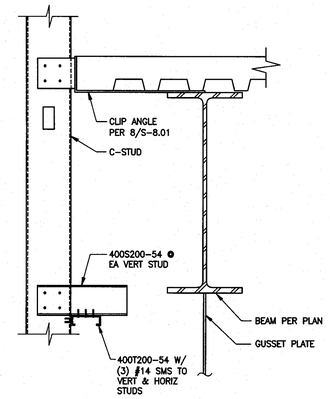

C SECTION
SCALE: 1 1/2"=1'-0"

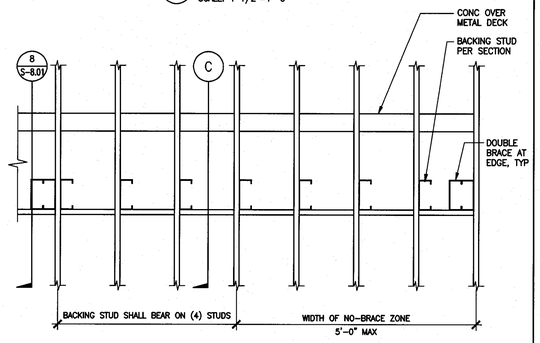

B ELEVATION AT CORNER

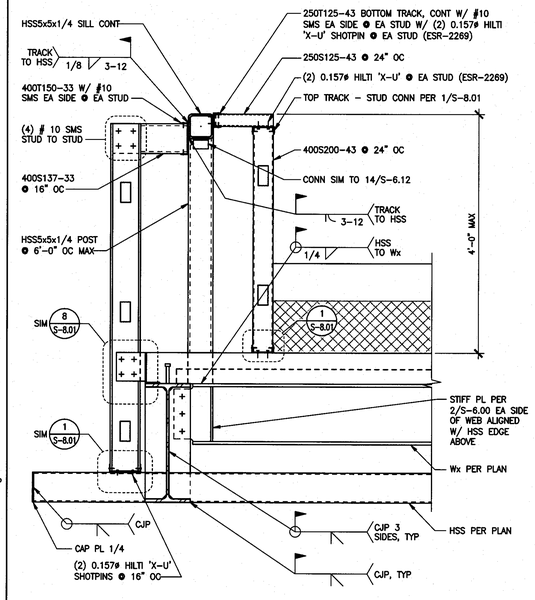

SECTION AT CURTAIN WALL SILL 1"=1'-0" | 1

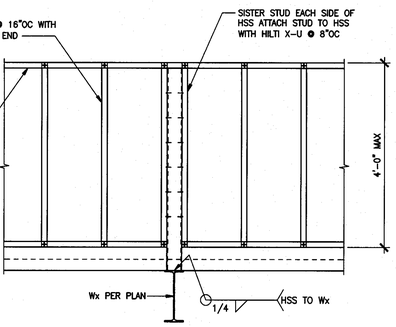

DETAIL 3/4"=1'-0" | 10

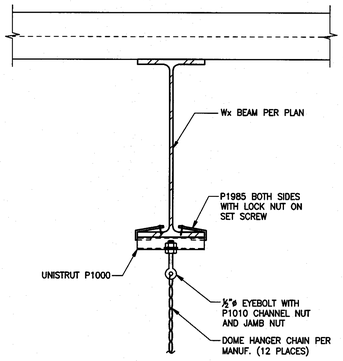

TYPICAL DOME VERTICAL HANGER SUPPORT DETAIL 1"=1'-0" | 7

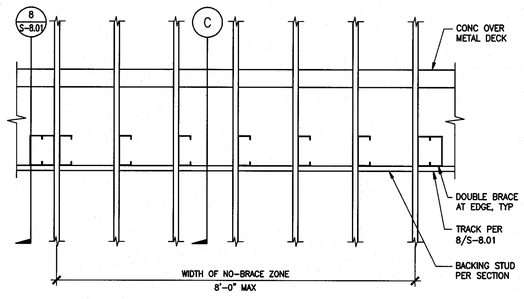

A TYPICAL ELEVATION

ALTERNATE SUPPORT AT EXT. WALL HANGING CLIP CONN. 3/4"=1'-0" | 4

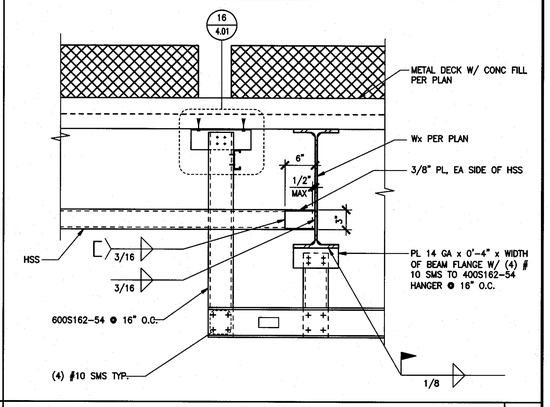

FRAMING AT METAL PANEL/ PLASTER SOFFIT 1"=1'-0" | 2

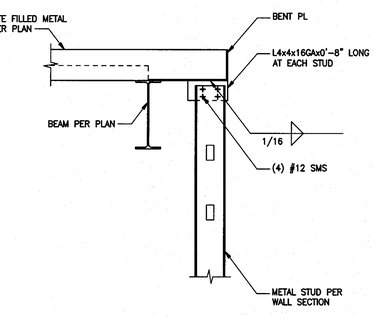

TYP EXTERIOR HANGING STUD DETAIL AT EDGE OF DECK 1"=1'-0" | 11

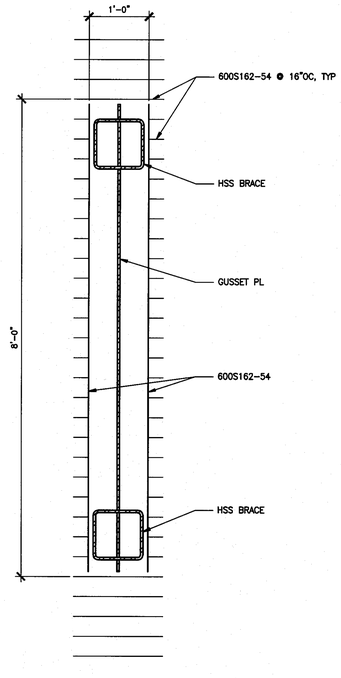

PLAN VIEW

STUD CONFIGURATION AT BRACED FRAME 1"=1'-0" | 8

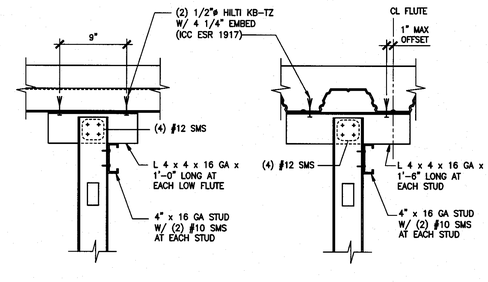

B METAL DECK W/ CONC FILL
FLUTES PERPENDICULAR TO WALL

A METAL DECK W/ CONC FILL
FLUTES PARALLEL TO WALL

TYPICAL EXTERIOR HANGING STUD DETAIL AT DECK 1 1/2"=1'-0" | 5

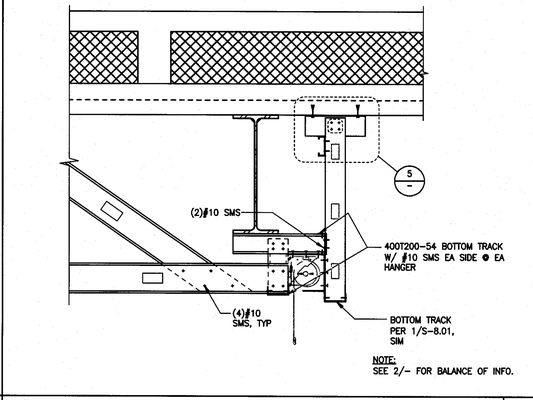

DETAIL 1"=1'-0" | 3

NOT USED 1"=1'-0" | 12

File: W:\20071.107833 - Antelope Valley College - Health and Science Building\sdraw\S-8.03.dwg
Plotted: 9/15/09 at 1:25pm By: cvellida
XREFs: 1/78.33_Ts.dwg

tBP architecture planning interiors management
tBP/Architecture
5455 Wilshire Boulevard, Suite 1200
Los Angeles, CA 90036-4242
ph: 323. 556. 3788 fx: 323. 556. 3799
LICENSED ARCHITECT STATE OF CALIFORNIA
architect

kpff Consulting Engineers
301 North Lake Avenue, Suite 500
Pasadena, California 91101
626/ 578-1121 Fax: 626/ 578-1123
REGISTERED PROFESSIONAL ENGINEER STRUCTURAL STATE OF CALIFORNIA
consultant

IDENTIFICATION STAMP
DIV. OF THE STATE ARCHITECT
OFFICE OF REGULATION SERVICES
File No. 19-C11
Appl No. 03-112201
AC. DS SS SCP
DATE 10-13-09

DSA Los Angeles Basin Regional Office
700 North Alameda Street, Suite 5-500
Los Angeles, California 90012
ph: 213/897-3995 fx: 213/897-3159/0726
agency

ANTELOPE VALLEY COLLEGE HEALTH & SCIENCE BUILDING

ANTELOPE VALLEY COMMUNITY COLLEGE DISTRICT
3041 WEST AVENUE K
LANCASTER, CA 93536-5426

owner

tBP project number: 2064L00
file name: S-802.DWG
drawn by: CV checked by: GD
date: JULY 30, 2009 - 100% CD

Rev:	date:	description:

THIS DRAWING AND THE DESIGNS, DEPICTIONS, IDEAS AND OTHER INFORMATION CONTAINED HEREIN CONSTITUTE UNPUBLISHED WORK OF tBP/ARCHITECTURE AND SHALL REMAIN THE PROPERTY OF tBP/ARCHITECTURE IN PERPETUITY. NO PART THEREOF SHALL BE REPRODUCED, DISCLOSED, DISTRIBUTED, SOLD, PUBLISHED OR OTHERWISE USED IN ANY WAY WITHOUT THE ADVANCED EXPRESS WRITTEN CONSENT OF tBP/ARCHITECTURE.

drawing title:
ENLARGED SECTIONS

drawing no.:
S-8.03
drawing of