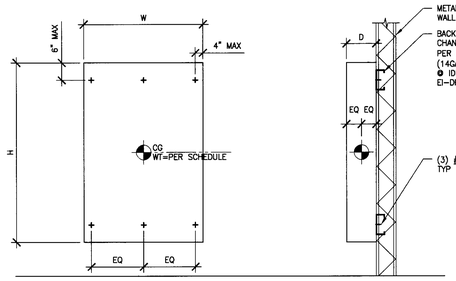

EQUIPMENT SCHEDULE				
EQUIP ID	W(lbs)	H(in)	D(in)	W(in)
EI LDA	230	60	5.5	20
IDLB	610	75	10.5	36
2DLB	225	72	6	20
EI-DHA	615	73	10.4	36

SURFACE MOUNTED PANEL BOARD ANCHORAGE 1"=1'-0" **7**

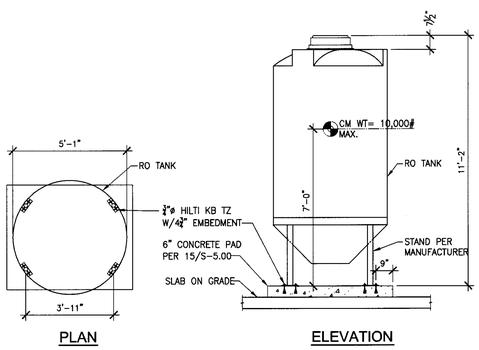

RO 1070 GALLON TANK ANCHORAGE 3/8"=1'-0" **8**

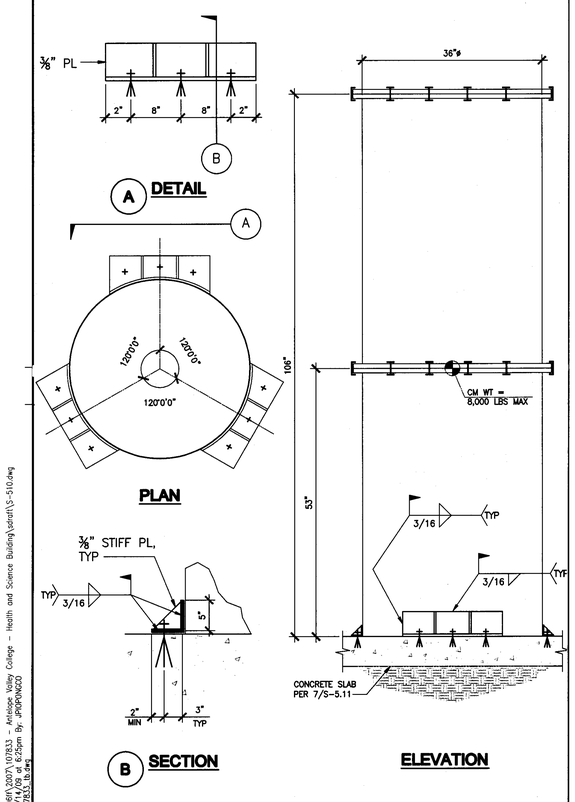

TANK T-5 ANCHORAGE DETAIL NTS **9**

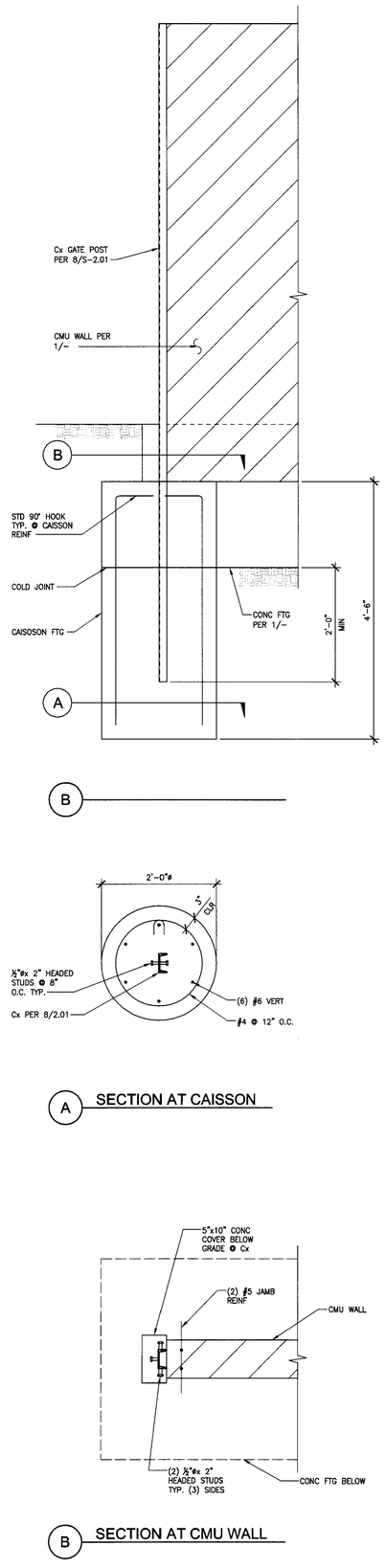

GATE POST FOOTING 1"=1'-0" **6**

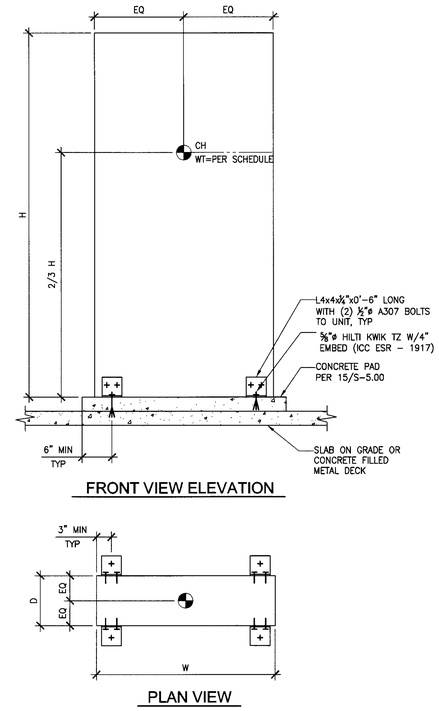

EQUIPMENT SCHEDULE				
EQUIP ID	W(lbs)	H(in)	D(in)	W(in)
IDLA	610	90	30	30

PRL4 EQUIPMENT ANCHORAGE 1"=1'-0" **4**

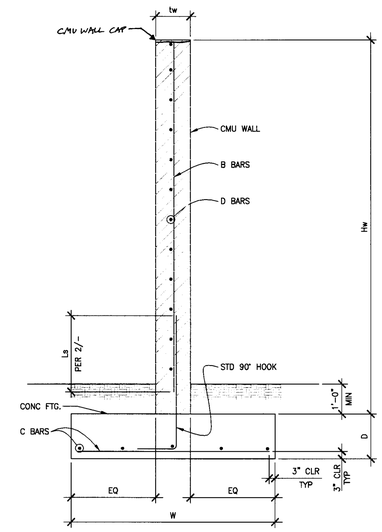

CMU FENCE WALL SCHEDULE						
Hw	tw	W	D	B BARS	C BARS	D BARS
≤4'-0"	0'-8"	2'-0"	1'-3"	#5 @ 16" OC	#4 @ 12" T&B	#4 @ 24"
≤7'-0"	0'-8"	3'-0"	1'-3"	#5 @ 16" OC	#4 @ 12" T&B	#4 @ 24"
≤9'-0"	0'-8"	3'-6"	1'-6"	#5 @ 16" OC	#4 @ 12" T&B	#4 @ 24"

CMU FENCE WALL DETAIL 1"=1'-0" **1**

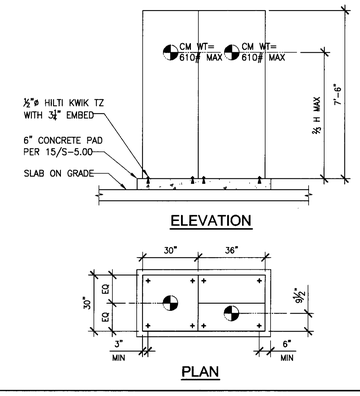

1 DLA 4 ANCHORAGE 3/8"=1'-0" **5**

BAR SIZE	DEVELOPMENT LENGTH (l_d)	LAP SPLICE LENGTH (l_s)
#3	2'-0"	3'-0"
#4	2'-0"	3'-0"
#5	2'-6"	3'-9"
#6	3'-0"	4'-6"
#7	3'-6"	5'-3"
#8	4'-0"	N/A
#9	4'-6"	N/A

NOTES:

1. USE SPLICE LENGTH (l_s) INDICATED ON TABLE FOR ALL DOWEL LENGTHS NOT SHOWN ON PLANS UNLESS OTHERWISE PERMITTED BY ENGINEER.
2. DEVELOPMENT LENGTHS (l_d) AND SPLICE LENGTHS (l_s) SHOWN IN THE SCHEDULE CORRESPOND TO GRADE 60 BARS EMBEDDED IN NORMAL WEIGHT CMU (f'm=1500 PSI).
3. THIS SCHEDULE SHALL BE USED WHERE DEVELOPMENT AND SPLICE LENGTHS ARE NOT SPECIFICALLY DETAILED AND DIMENSIONED ON THE DRAWINGS.
4. "N/A" INDICATES WELDED OR MECHANICAL SPLICE IS REQUIRED IN LEIU OF NON-CONTACT LAP SPLICE.
5. WHERE BARS OF DIFFERENT SIZE ARE LAP SPLICED, SPLICE LENGTH SHALL BE THE LARGER OF DEVELOPMENT LENGTH OF LARGER BAR, OR SPLICE LENGTH OF SMALLER BAR.

CMU REINFORCEMENT SPLICE SCHEDULE 1"=1'-0" **2**

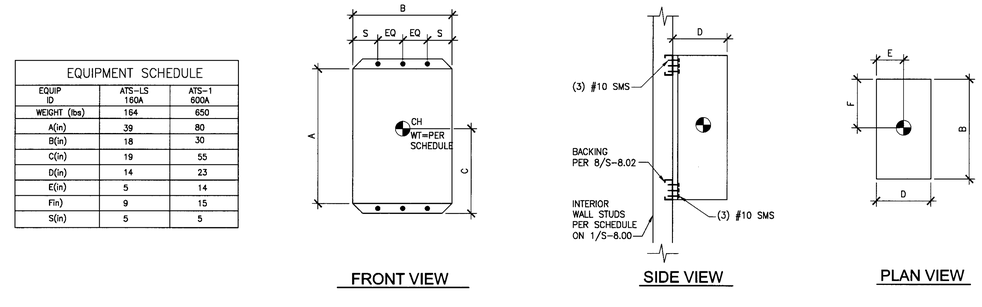

EQUIPMENT SCHEDULE		
EQUIP ID	ATS-LS 160A	ATS-1 600A
WEIGHT (lbs)	164	650
A(in)	39	80
B(in)	18	30
C(in)	19	55
D(in)	14	23
E(in)	5	14
F(in)	9	15
S(in)	5	5

ATS-LS 160A ? ATS-1 400A 1"=1'-0" **3**

tBP architecture planning interiors management

tBP/Architecture
5455 Wilshire Boulevard, Suite 1200
Los Angeles, CA 90036-4242
ph: 323. 556. 3788 fx: 323. 556. 3799

LICENSED ARCHITECT STATE OF CALIFORNIA

architect

kpff Consulting Engineers
301 North Lake Avenue, Suite 600
Pasadena, California 91101
626)58 570-1921 Fax: 626)58 570-0921

REGISTERED PROFESSIONAL ENGINEER STRUCTURAL STATE OF CALIFORNIA
No. 12/31/09

consultant

IDENTIFICATION STAMP
DIV. OF THE STATE ARCHITECT
OFFICE OF REGULATION SERVICES
File No. 19-C11
Appl No. 03-112201
AC RS SS SPC
DATE 10 . 13 . 09

DSA Los Angeles Basin Regional Office
700 North Alameda Street, Suite 5-500
Los Angeles, California 90012
ph: 213/897-3995 fx: 213/897-3159/0726

agency

ANTELOPE VALLEY COLLEGE
HEALTH & SCIENCE BUILDING
ANTELOPE VALLEY COMMUNITY COLLEGE DISTRICT
3041 WEST AVENUE K
LANCASTER, CA 93536-5426

owner

tBP project number : 20641.00

file name: S-610.DWG

drawn by: CV checked by: CD

date: JULY 30, 2009 - 100% CD

Rev:	date:	description:

THIS DRAWING AND THE DESIGNS, DEPICTIONS, IDEAS AND OTHER INFORMATION CONTAINED HEREIN CONSTITUTE UNPUBLISHED WORK OF tBP/ARCHITECTURE AND SHALL REMAIN THE PROPERTY OF tBP/ARCHITECTURE IN PERPETUITY. NO PART THEREOF SHALL BE REPRODUCED, DISCLOSED, DISTRIBUTED, SOLD, PUBLISHED OR OTHERWISE USED IN ANY WAY WITHOUT THE ADVANCED EXPRESS WRITTEN CONSENT OF tBP/ARCHITECTURE.

drawing title:
SITE DETAILS

drawing no.:
S-5.10
drawing of

File: K:\20641\2007\107833 - Antelope Valley College - Health and Science Building\struct\S-510.dwg
Plotted: 9/14/09 at 6:25pm By: JPROPINCO
XREFS: QTB3.lb.dwg