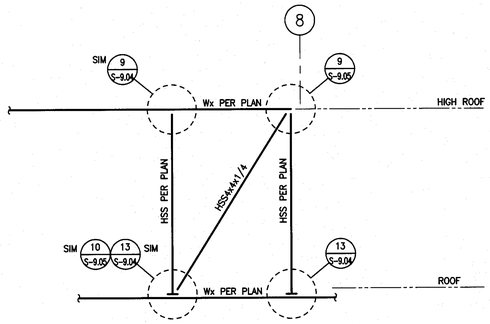

FRAME ELEVATION AT STAIR #1 ROOF 1/4"=1'-0" **5**

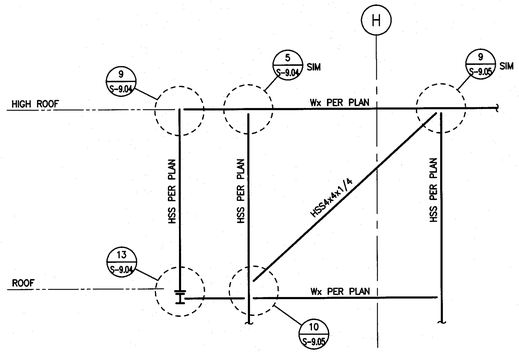

FRAME ELEVATION AT STAIR #1 ROOF 1/4"=1'-0" **6**

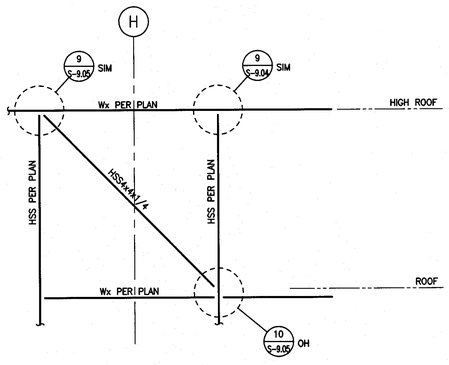

FRAME ELEVATION AT STAIR #1 ROOF 1/4"=1'-0" **7**

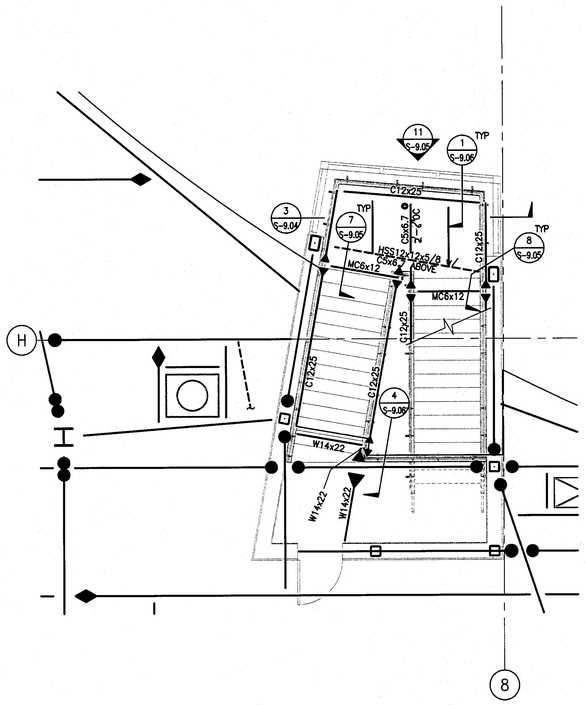

ROOF LEVEL FRAMING STAIR 1 1/4"=1'-0" **3**

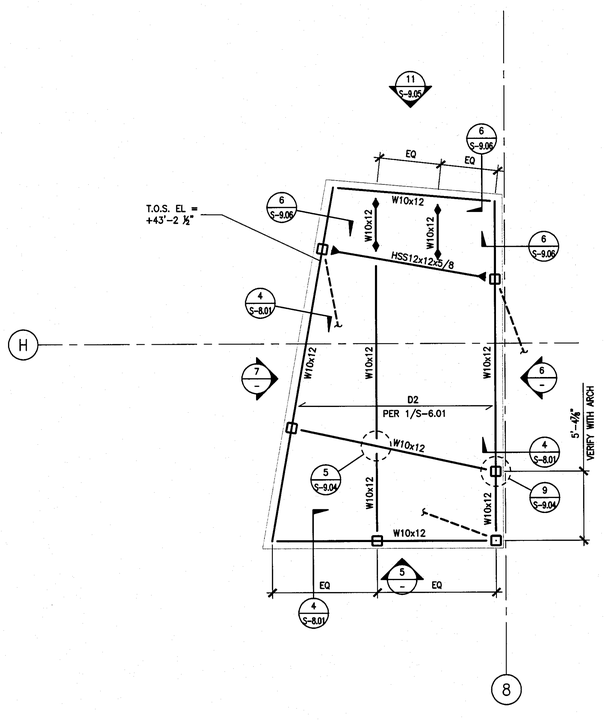

HIGH ROOF STAIR 1 1/4"=1'-0" **4**

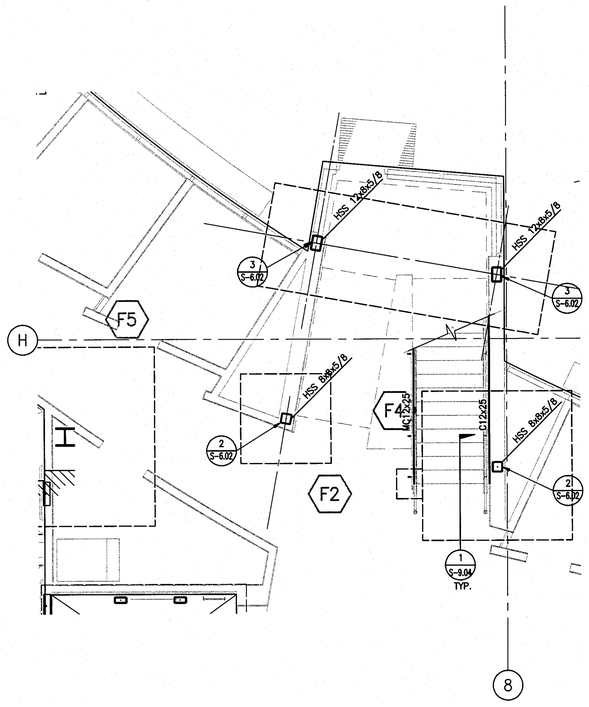

1ST FLOOR STAIR 1 1/4"=1'-0" **1**

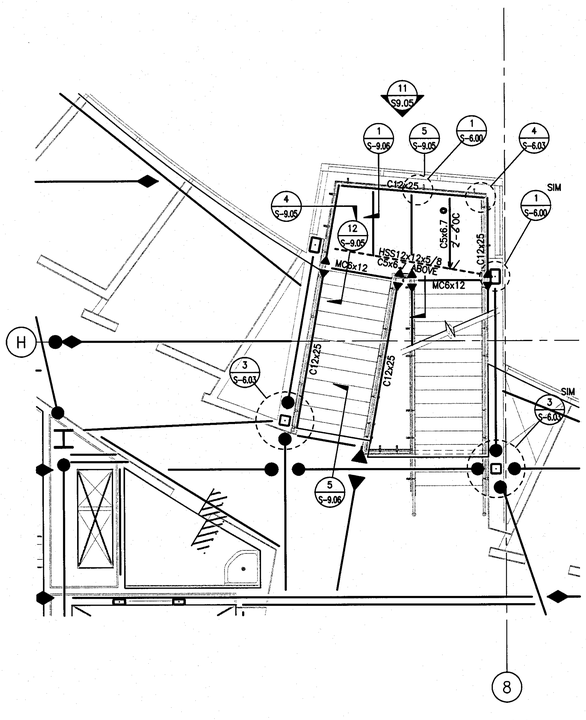

2ND FLOOR STAIR 1 1/4"=1'-0" **2**

File: W:\20071\107833 - Antelope Valley College - Health and Science Building\sdraft\S-900.dwg
Plotted: 9/16/09 at 12:32pm By: cvallado
XREFS: 107833_fb.dwg 107833_1FP.dwg 107833_STP.dwg 107833_2FP.dwg 107833_RP.dwg 107833_3FP.dwg 107833_3FP.dwg

tBP
architecture
planning
interiors
management

tBP/Architecture
5455 Wilshire Boulevard, Suite 1200
Los Angeles, CA 90036-4242
ph: 323. 556. 3788 fx: 323. 556. 3799

LICENSED ARCHITECT
STEVEN C. CHAN
C-17872
STATE OF CALIFORNIA

architect

kpff Consulting Engineers
301 North Lake Avenue, Suite 550
Pasadena, California 91101
626/ 578-1151 Fax 626/ 578-1151

REGISTERED PROFESSIONAL ENGINEER
LISA J. WALLACE
S3399
Exp. 12/31/09
STRUCTURAL
STATE OF CALIFORNIA

consultant

IDENTIFICATION STAMP
DIV. OF THE STATE ARCHITECT
OFFICE OF REGULATION SERVICES
File No. 19-C11
Appl No. 03-112201
AC ___ RS ___ SS SPA
DATE 10.13-09

DSA Los Angeles Basin Regional Office
700 North Alameda Street, Suite 5-500
Los Angeles, California 90012
ph: 213/897-3995 fx: 213/897-3159/0726

agency

ANTELOPE VALLEY COLLEGE HEALTH & SCIENCE BUILDING

ANTELOPE VALLEY COMMUNITY COLLEGE DISTRICT
3041 WEST AVENUE K
LANCASTER, CA 93536-5426

owner

tBP project number : 20641.00
file name: S-102.DWG
drawn by: SG checked by: GD
date: JULY 30, 2009 - 100% CD

Rev:	date:	description:

THIS DRAWING AND THE DESIGNS, DEPICTIONS, IDEAS AND OTHER INFORMATION CONTAINED HEREIN CONSTITUTE UNPUBLISHED WORK OF tBP/ARCHITECTURE AND SHALL REMAIN THE PROPERTY OF tBP/ARCHITECTURE IN PERPETUITY. NO PART THEREOF SHALL BE REPRODUCED, DISCLOSED, DISTRIBUTED, SOLD, PUBLISHED OR OTHERWISE USED IN ANY WAY WITHOUT THE ADVANCED EXPRESS WRITTEN CONSENT OF tBP/ARCHITECTURE.

drawing title:
STAIR 1
FRAMING PLANS

drawing no.:
S-9.00
drawing of