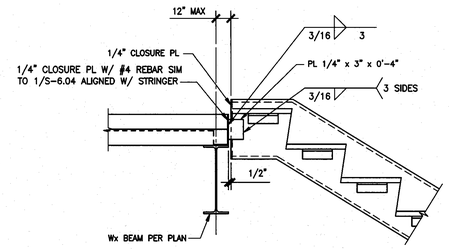

NOTE: SEE 3/- FOR BALANCE OF INFORMATION.

STAIR #1 AT 2ND FLOOR 1"=1'-0" **5**

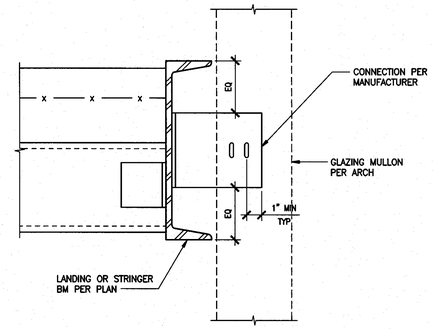

GLAZING SUPPORT @ STAIR FRAMING 3"=1'-0" **1**

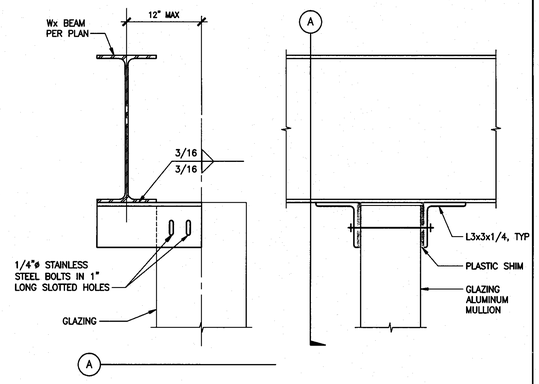

GLAZING TO STRUCTURE CONNECTION 3"=1'-0" **6**

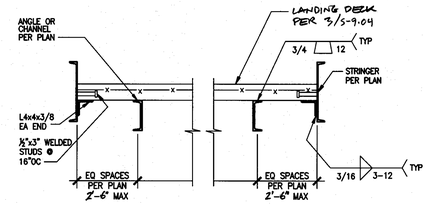

LANDING SECTION - STAIR #4 1"=1'-0" **2**

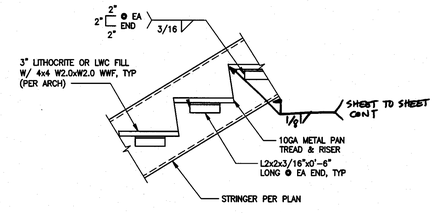

STAIR 1"=1'-0" **3**

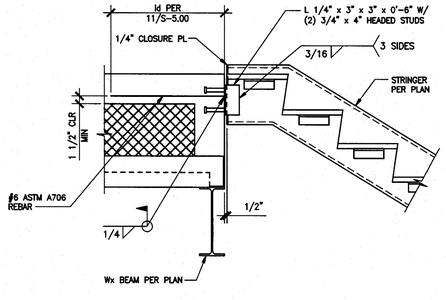

NOTE: SEE 3/- FOR BALANCE OF INFORMATION.

STAIR #1 AT ROOF DECK 1"=1'-0" **4**

tBP architecture planning interiors management

tBP/Architecture
5455 Wilshire Boulevard, Suite 1200
Los Angeles, CA 90036-4242
ph: 323. 556. 3788 fx: 323. 556. 3799

LICENSED ARCHITECT — STATE OF CALIFORNIA

architect

kpff Consulting Engineers
301 North Lake Avenue, Suite 600
Pasadena, California 91101
626/89 578-1921 Fax: 626/89 578-0921

REGISTERED PROFESSIONAL ENGINEER — STRUCTURAL — STATE OF CALIFORNIA

consultant

IDENTIFICATION STAMP
DIV. OF THE STATE ARCHITECT
OFFICE OF REGULATION SERVICES
File No. 19-C11
Appl No. 03-112201
AC RS SS SEC
DATE 10-13-09

DSA Los Angeles Basin Regional Office
700 North Alameda Street, Suite 5-500
Los Angeles, California 90012
ph: 213/897-3995 fx: 213/897-3159/0726

agency

ANTELOPE VALLEY COLLEGE HEALTH & SCIENCE BUILDING

ANTELOPE VALLEY COMMUNITY COLLEGE DISTRICT
3041 WEST AVENUE K
LANCASTER, CA 93536-5426

owner

tBP project number : 20641.00

file name: S-905.DWG

drawn by: SG checked by: GD

date: JULY 30, 2009 - 100% CD

Rev:	date:	description:

THIS DRAWING AND THE DESIGNS, DEPICTIONS, IDEAS AND OTHER INFORMATION CONTAINED HEREIN CONSTITUTE UNPUBLISHED WORK OF tBP/ARCHITECTURE AND SHALL REMAIN THE PROPERTY OF tBP/ARCHITECTURE IN PERPETUITY. NO PART THEREOF SHALL BE REPRODUCED, DISCLOSED, DISTRIBUTED, SOLD, PUBLISHED OR OTHERWISE USED IN ANY WAY WITHOUT THE ADVANCED EXPRESS WRITTEN CONSENT OF tBP/ARCHITECTURE.

drawing title:
STAIR DETAILS

drawing no:
S-9.06
drawing of

File: C:\DOCUME~1\cwallace\LOCALS~1\Temp\AcPublish_1872\S-905.dwg
Plotted: 9/15/09 at 2:09pm By: cwallace
XREFS: 19253_tb.dwg