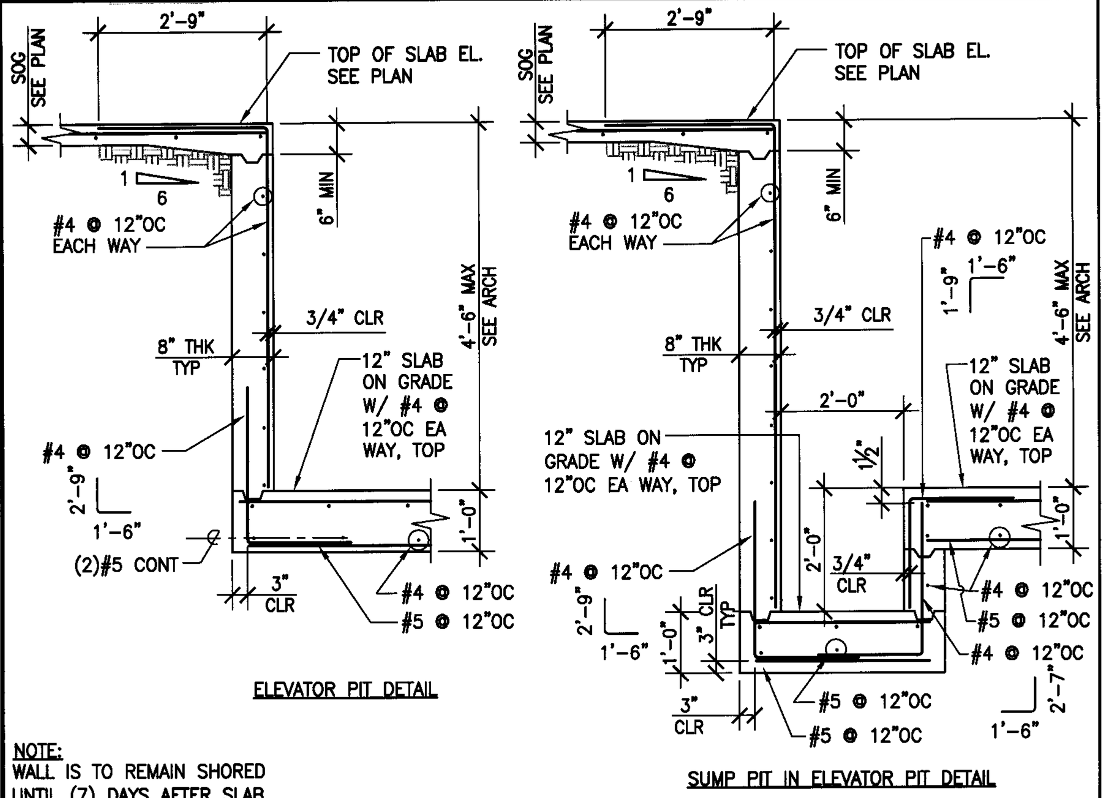

NOTE:
WALL IS TO REMAIN SHORED UNTIL (7) DAYS AFTER SLAB ABOVE WALL HAS BEEN PLACED

ELEVATOR OR SUMP PIT DETAIL
1/2"=1'-0" | 12

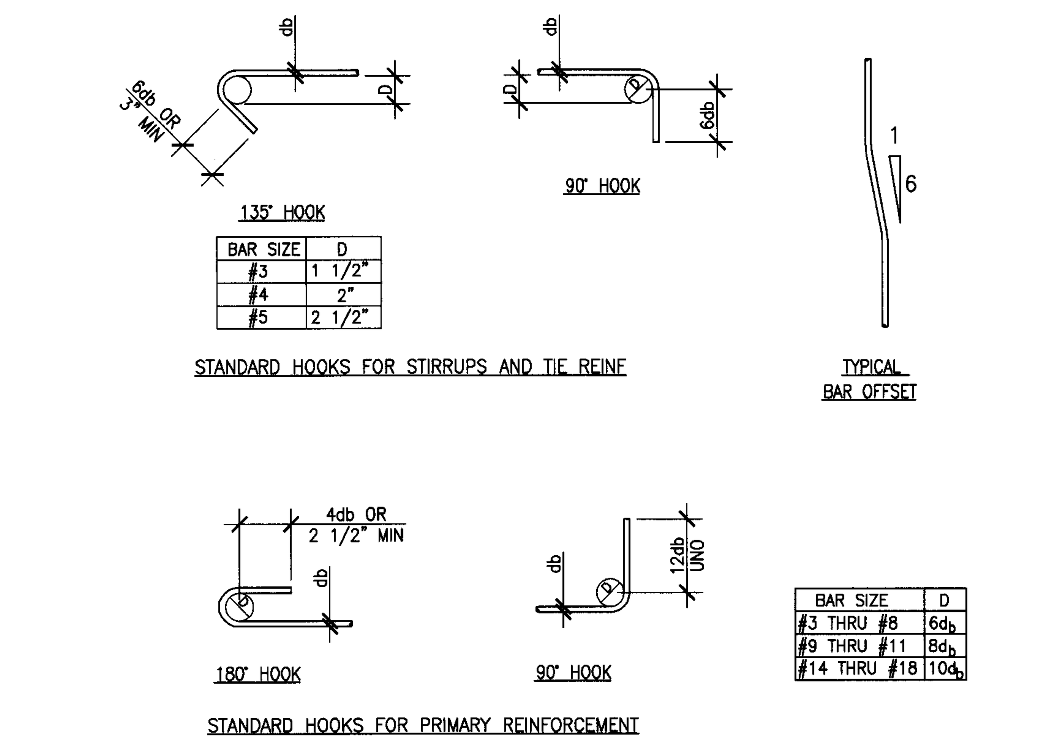

BAR SIZE	D
#3	1 1/2"
#4	2"
#5	2 1/2"

STANDARD HOOKS FOR STIRRUPS AND TIE REINF

BAR SIZE	D
#3 THRU #8	$6d_b$
#9 THRU #11	$8d_b$
#14 THRU #18	$10d_b$

STANDARD HOOKS FOR PRIMARY REINFORCEMENT

REINFORCING BAR BENDING DETAILS
1"=1'-0" | 9

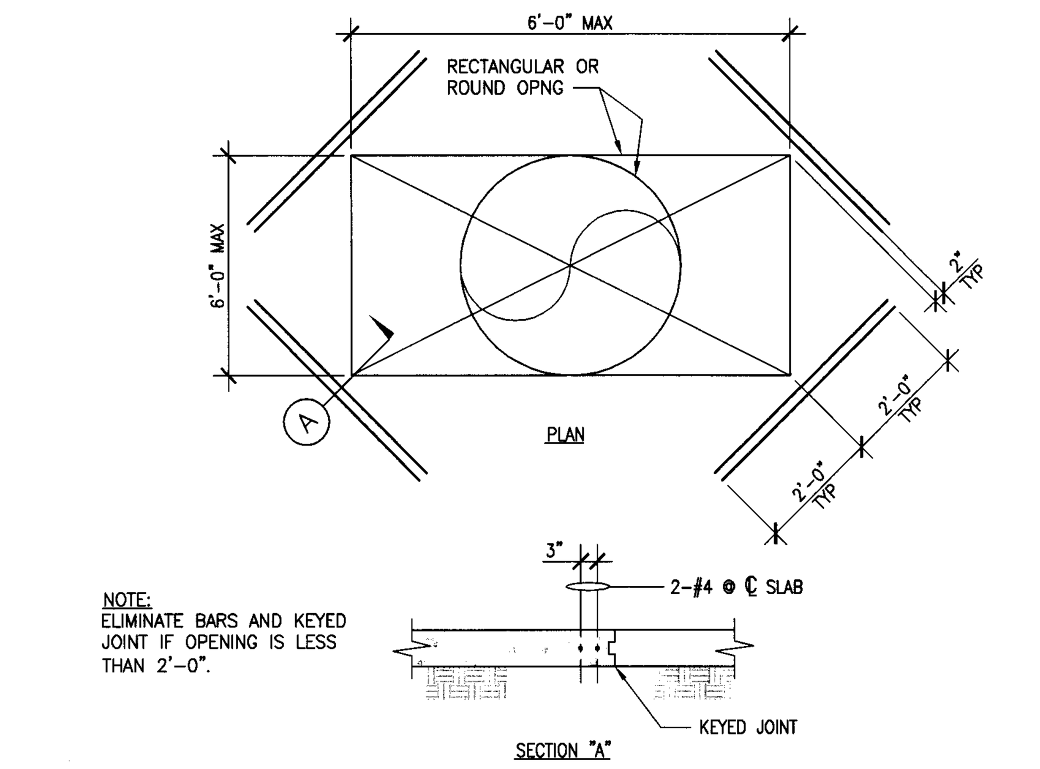

NOTE:
ELIMINATE BARS AND KEYED JOINT IF OPENING IS LESS THAN 2'-0".

OPENING IN SLAB ON GRADE
1/2"=1'-0" | 5

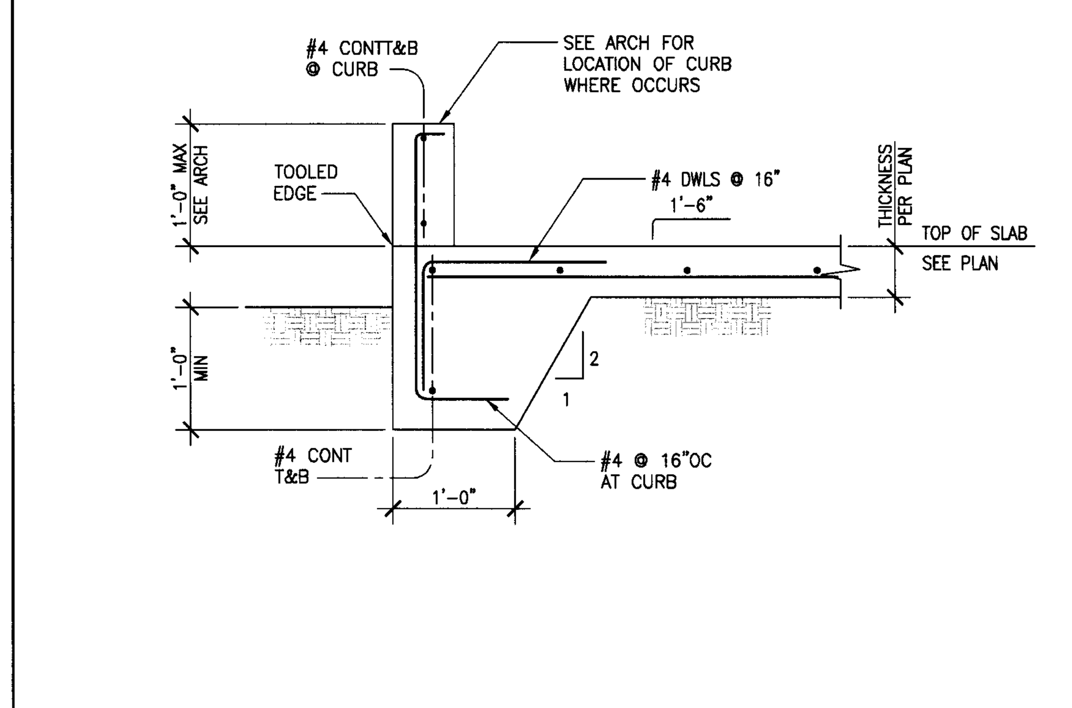

EDGE OF SLAB ON GRADE
1"=1'-0" | 1

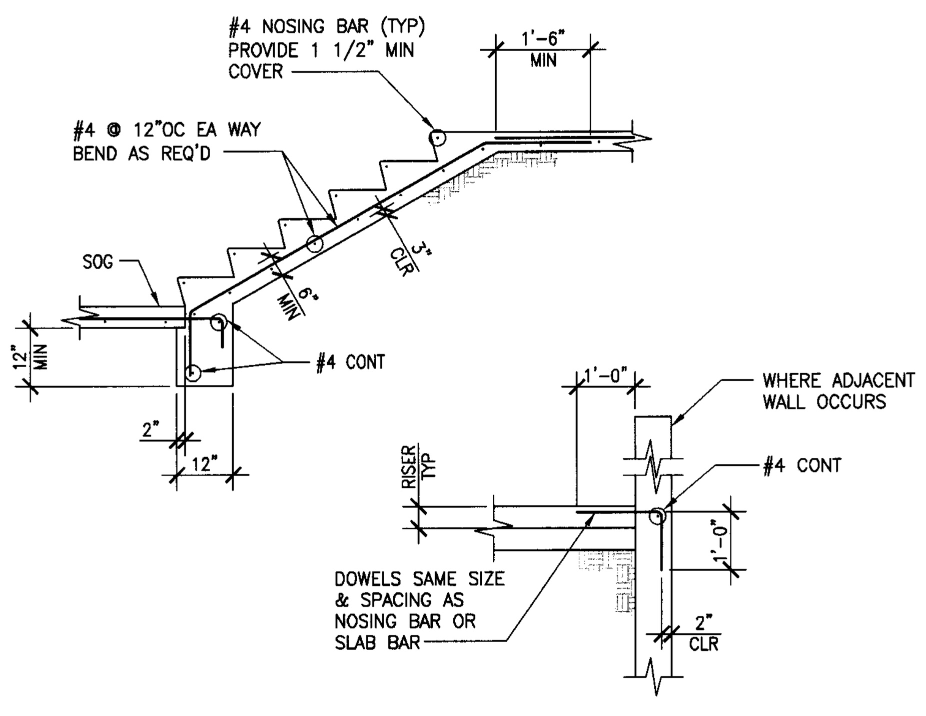

CONCRETE STAIRS ON GRADE DETAIL
1/2"=1'-0" | 13

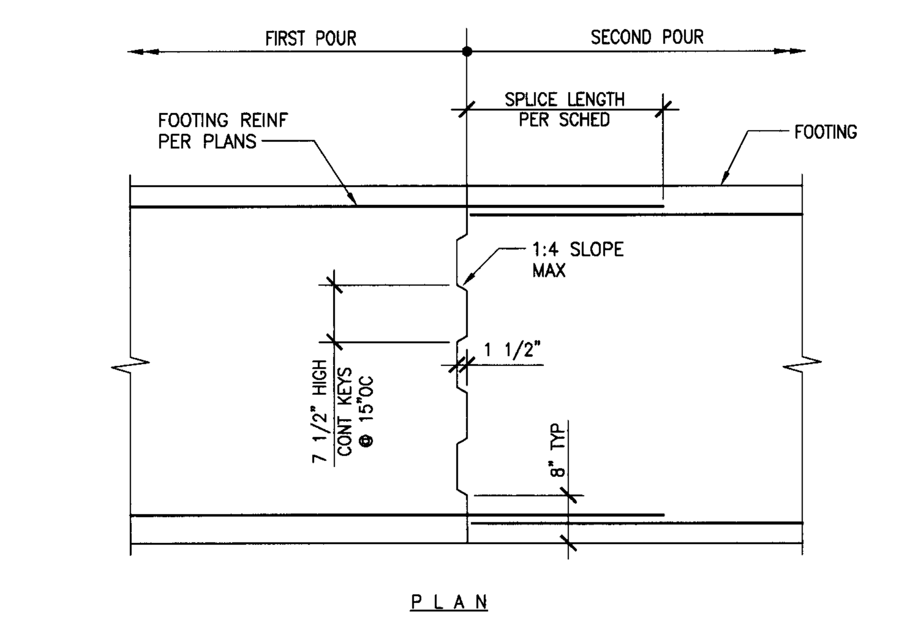

NOTE:
WELDED SPLICES REQUIRED FOR #14 AND LARGER BARS. WHERE CONTINUOUS FOOTING IS UNDER A WALL, LOCATE CONSTRUCTION JOINT AT 1/4 OF THE CLEAR OPENING WIDTH ABOVE FROM FACE OF OPENING, OR IN MIDDLE 1/3 OF THE DISTANCE BETWEEN COLUMNS.

FOOTING CONSTRUCTION JOINT
1"=1'-0" | 10

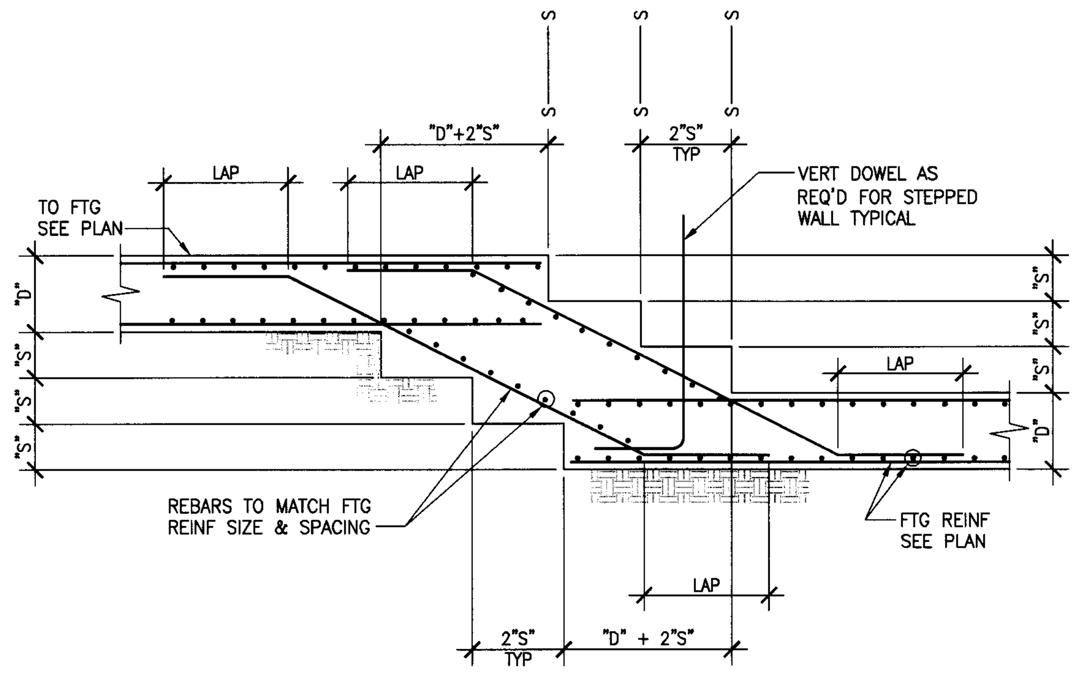

NOTES:
1. "S" = 1'-6" MAX
2. "D" = DEPTH OF FTG
3. FOR LAP LENGTHS SEE SCHEDULE

STEPPED FOOTING DETAIL
1/4"=1'-0" | 6

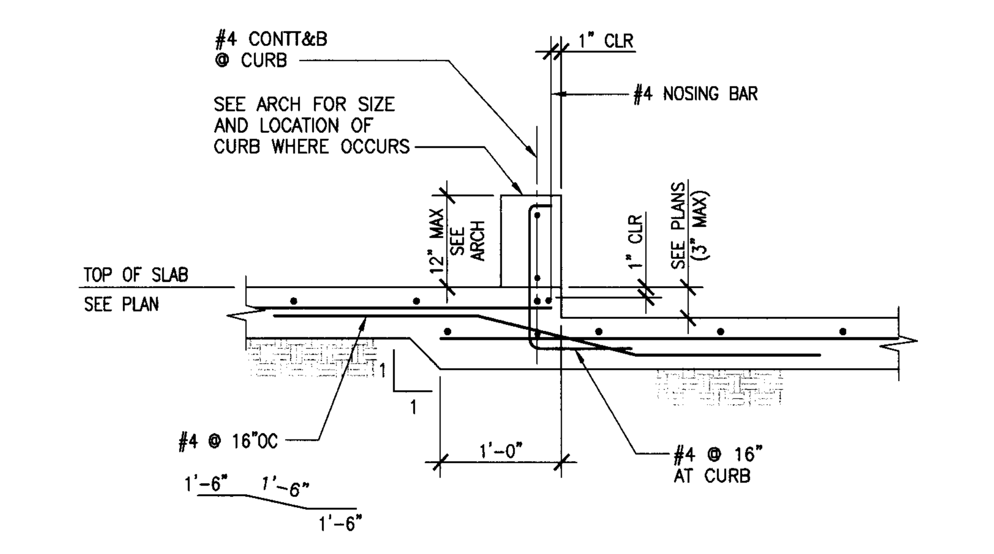

DEPRESSION IN SLAB ON GRADE
1"=1'-0" | 2

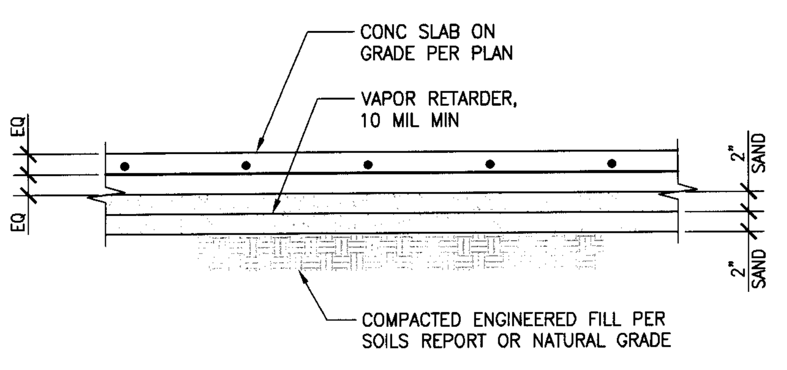

TYPICAL INTERIOR SLAB ON GRADE
1"=1'-0" | 14

BAR SIZE	"TOP" REINFORCEMENT DEVELOPMENT LENGTH (l_d)	"TOP" REINFORCEMENT LAP SPLICE LENGTH (l_s)	"OTHER" REINFORCEMENT DEVELOPMENT LENGTH (l_d)	"OTHER" REINFORCEMENT LAP SPLICE LENGTH (l_s)
#3	1'-10"	2'-4"	1'-5"	1'-10"
#4	2'-5"	3'-2"	1'-10"	2'-5"
#5	3'-0"	3'-11"	2'-4"	3'-0"
#6	3'-7"	4'-8"	2'-9"	3'-7"
#7	5'-3"	6'-9"	4'-0"	5'-3"
#8	6'-0"	7'-9"	4'-7"	6'-0"
#9	6'-9"	8'-9"	5'-2"	6'-9"
#10	7'-7"	9'-10"	5'-10"	7'-7"
#11	8'-5"	11'-0"	6'-6"	8'-5"

1. USE SPLICE LENGTH (ls) INDICATED ON TABLE FOR ALL DOWEL LENGTHS NOT SHOWN ON PLANS UNLESS OTHERWISE PERMITTED BY ENGINEER.
2. DEVELOPMENT LENGTHS (ld) AND SPLICE LENGTHS (ls) SHOWN IN THE SCHEDULE ABOVE ARE IN ACCORDANCE WITH ACI 318-05 AND CORRESPOND TO GRADE 60 BARS EMBEDDED IN NORMAL WEIGHT CONCRETE (f'c=3000 PSI). FOR CONCRETE WITH f'c=4000 psi MULTIPLY VALUES IN TABLE BY 0.86. FOR LT WT AGGREGATE CONCRETE, MULTIPLY VALUES IN TABLE BY 1.3.
3. THIS SCHEDULE SHALL BE USED WHERE DEVELOPMENT AND SPLICE LENGTHS ARE NOT SPECIFICALLY DETAILED AND DIMENSIONED ON THE DRAWINGS.
4. THE SCHEDULE ABOVE IS APPLICABLE FOR THE FOLLOWING CONDITIONS:
   a) CLEAR SPACING OF BARS BEING DEVELOPED OR SPLICED NOT LESS THAN d_b, CLEAR COVER NOT LESS THAN d_b, AND STIRRUPS OR TIES THROUGHOUT ld NOT LESS THAN THE CODE MINIMUM.

   OR

   b) CLEAR SPACING OF BARS BEING DEVELOPED OR SPLICED NOT LESS THAN $2d_b$ AND CLEAR COVER NOT LESS THAN d_b.
5. "TOP" REINFORCEMENT IS DEFINED AS HORIZONTAL REINFORCEMENT SO PLACED THAT MORE THAN 12" OF FRESH CONCRETE IS CAST IN THE MEMBER BELOW THE DEVELOPMENT OR SPLICE LENGTH. "OTHER" REINFORCEMENT INCLUDES ALL VERTICAL BARS AND HORIZONTAL BARS WITH LESS THAN 12" OF CONCRETE CAST BELOW BAR.
6. WHERE BARS OF DIFFERENT SIZE ARE LAP SPLICED, SPLICE LENGTH SHALL BE THE LARGER OF DEVELOPMENT LENGTH OF LARGER BAR, OR SPLICE LENGTH OF SMALLER BAR.

REINF DEVELOPMENT/LAP SPLICE SCHEDULE
NTS | 11

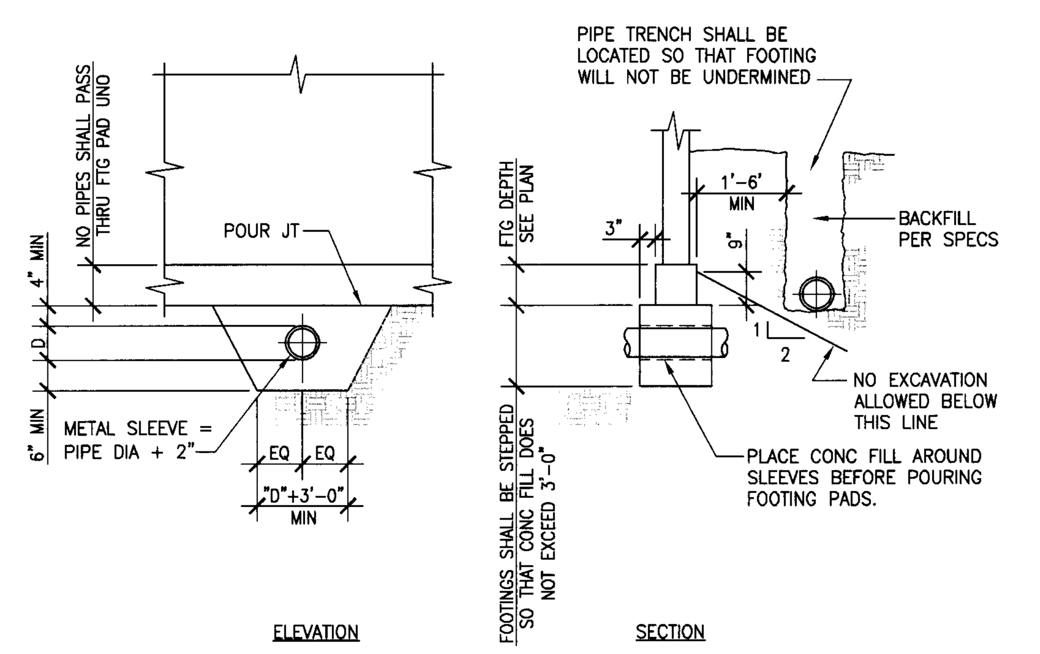

PIPE SLEEVE ? TRENCH FOOTING DETAIL
1"=1'-0" | 7

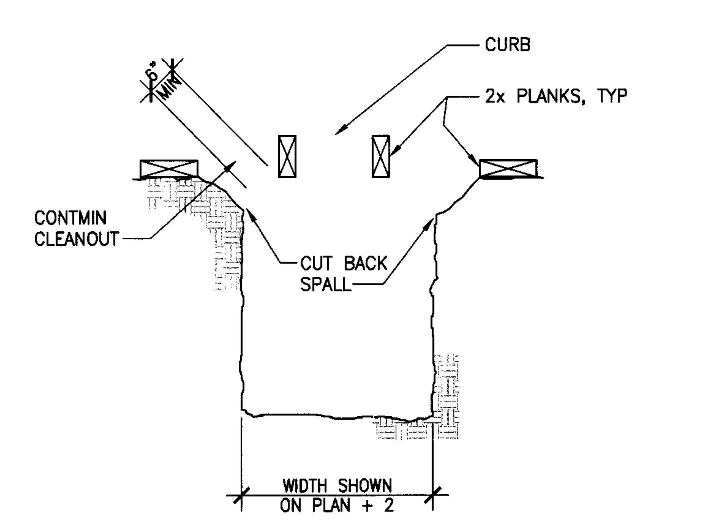

NOTES:
1. FORMWORK NOT PERMITTED BELOW GRADE (UNLESS SIDES OF FTG ARE FULLY FORMED). STAKES NOT PERMITTED IN FOOTING SECTION.
2. FOUNDATION CONCRETE MAY BE PLACED INTO NEAT EXCAVATIONS PROVIDED THE FOUNDATION TRENCH WALLS ARE STABLE AS DETERMINED BY THE ARCHITECT (STRUCTURAL ENGINEER) SUBJECT TO THE APPROVAL OF DSA. IN SUCH CASE, THE MINIMUM FORMWORK SHOWN ON DRAWINGS IS MANDATORY TO ENSURE CLEAN EXCAVATIONS IMMEDIATELY PRIOR AND DURING THE PLACING OF CONCRETE.

MANDATORY MINIMUM FORMWORK
NTS | 8

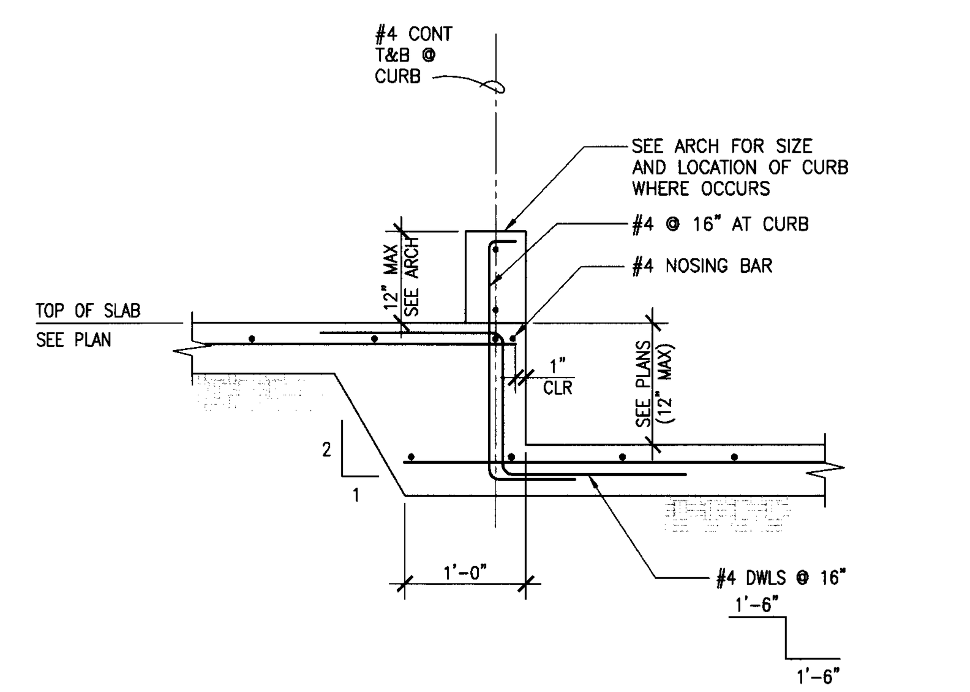

STEP IN SLAB ON GRADE
1"=1'-0" | 3

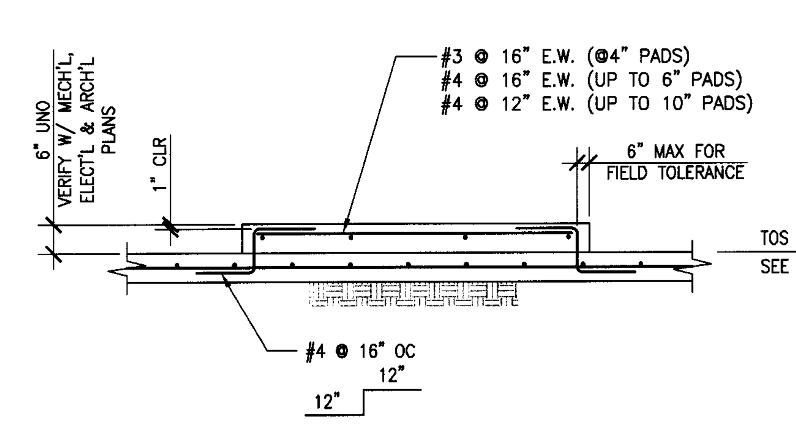

MECHANICAL PAD ON GRADE
1"=1'-0" | 15

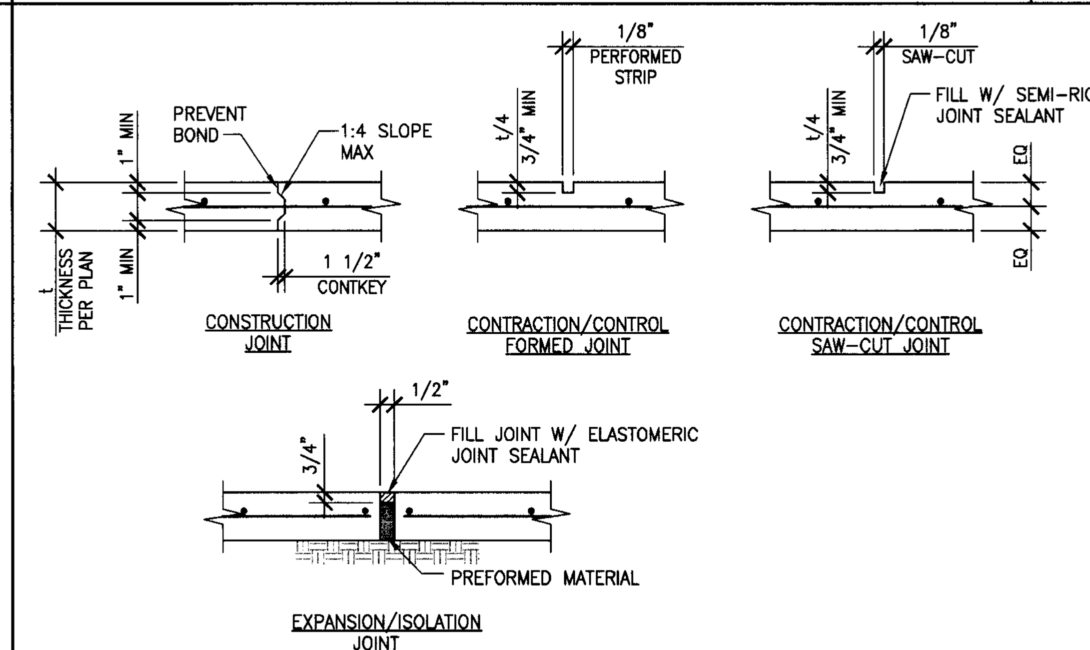

NOTES:
1. CONTRACTION/CONTROL JOINTS TO BE LOCATED AT COLUMN CENTER LINES AND/OR AT 15'-0" OC MAXIMUM SPACING.
2. IF SAW-CUT CONTROL JOINT TO BE USED, SAW-CUT WITHIN 24 HOURS OF POUR.
3. CONSTRUCTION JOINTS TO BE LOCATED AS PER NOTE #1.

INTERIOR SLAB ON GRADE JOINTS
NTS | 4

tBP
architecture planning interiors management
LICENSED ARCHITECT TIM C. PAN NO. C20074 REN. 4-30-11 STATE OF CALIFORNIA
tBP/Architecture
5455 Wilshire Boulevard, Suite 1200
Los Angeles, CA 90036-4242
ph: 323. 556. 3788 fx: 323. 556. 3799
architect

kpff Consulting Engineers
301 North Lake Avenue, Suite 550
Pasadena, California 91101
(626) 578-1121 Fax (626) 578-0921
REGISTERED PROFESSIONAL ENGINEER ALDRIN J. CRUE No. S4399 Exp. 12/31/09 STRUCTURAL STATE OF CALIFORNIA
consultant

IDENTIFICATION STAMP
DIV. OF THE STATE ARCHITECT
OFFICE OF REGULATION SERVICES
File No. 19-C11
Appl No. 03-112201
AC ___ FLS ___ SS SPA
DATE 10. 13 - 09

DSA Los Angeles Basin Regional Office
700 North Alameda Street, Suite 5-500
Los Angeles, California 90012
ph: 213/897-3995 fx: 213/897-3159/0726
agency

ANTELOPE VALLEY COLLEGE HEALTH & SCIENCE BUILDING
ANTELOPE VALLEY COMMUNITY COLLEGE DISTRICT
3041 WEST AVENUE K
LANCASTER, CA 93536-5426
owner

tBP project number : 20641.00
file name: S-500.DWG
drawn by: SG checked by: GD
date: JULY 30, 2009 - 100% CD

Rev.	date:	description:

THIS DRAWING AND THE DESIGNS, DEPICTIONS, IDEAS AND OTHER INFORMATION CONTAINED HEREIN CONSTITUTE UNPUBLISHED WORK OF tBP/ARCHITECTURE AND SHALL REMAIN THE PROPERTY OF tBP/ARCHITECTURE IN PERPETUITY. NO PART THEREOF SHALL BE REPRODUCED, DISCLOSED, DISTRIBUTED, SOLD, PUBLISHED OR OTHERWISE USED IN ANY WAY WITHOUT THE ADVANCED EXPRESS WRITTEN CONSENT OF tBP/ARCHITECTURE.

drawing title:
TYPICAL CONCRETE DETAILS

drawing no.:
S-5.00
drawing of

File: K:\2006ff\2007\107833 - Antelope Valley College - Health and Science Building\sdraft\S-500.dwg
Plotted: 9/14/09 at 6:25pm By: JPIOPONGCO
XREFs: 107833_tb.dwg