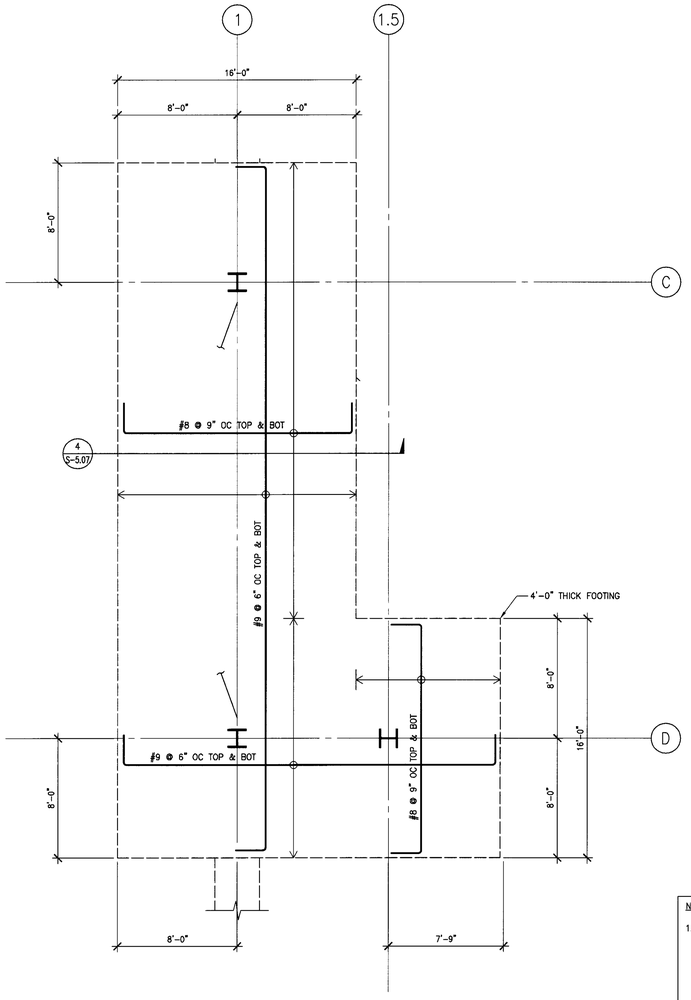

NOTE:

1. CONTRACTOR TO PROVIDE REBAR SPLICES PER 11/S-5.00 AS REQUIRED. SPLICES SHALL BE LOCATED IN THE MIDDLE ½ OF THE DISTANCE BETWEEN COLUMNS AND SHALL BE STAGGERED A MINIMUM DISTANCE EQUAL TO THE SPLICE LENGTH. CONTRACTOR SHALL PROVIDE SPLICE LOCATIONS TO ENGINEER FOR REVIEW AND APPROVAL PRIOR TO CONSTRUCTION.

PARTIAL FOUNDATION PLAN - FOOTING TYPE BF-14 1"=1'-0" 3

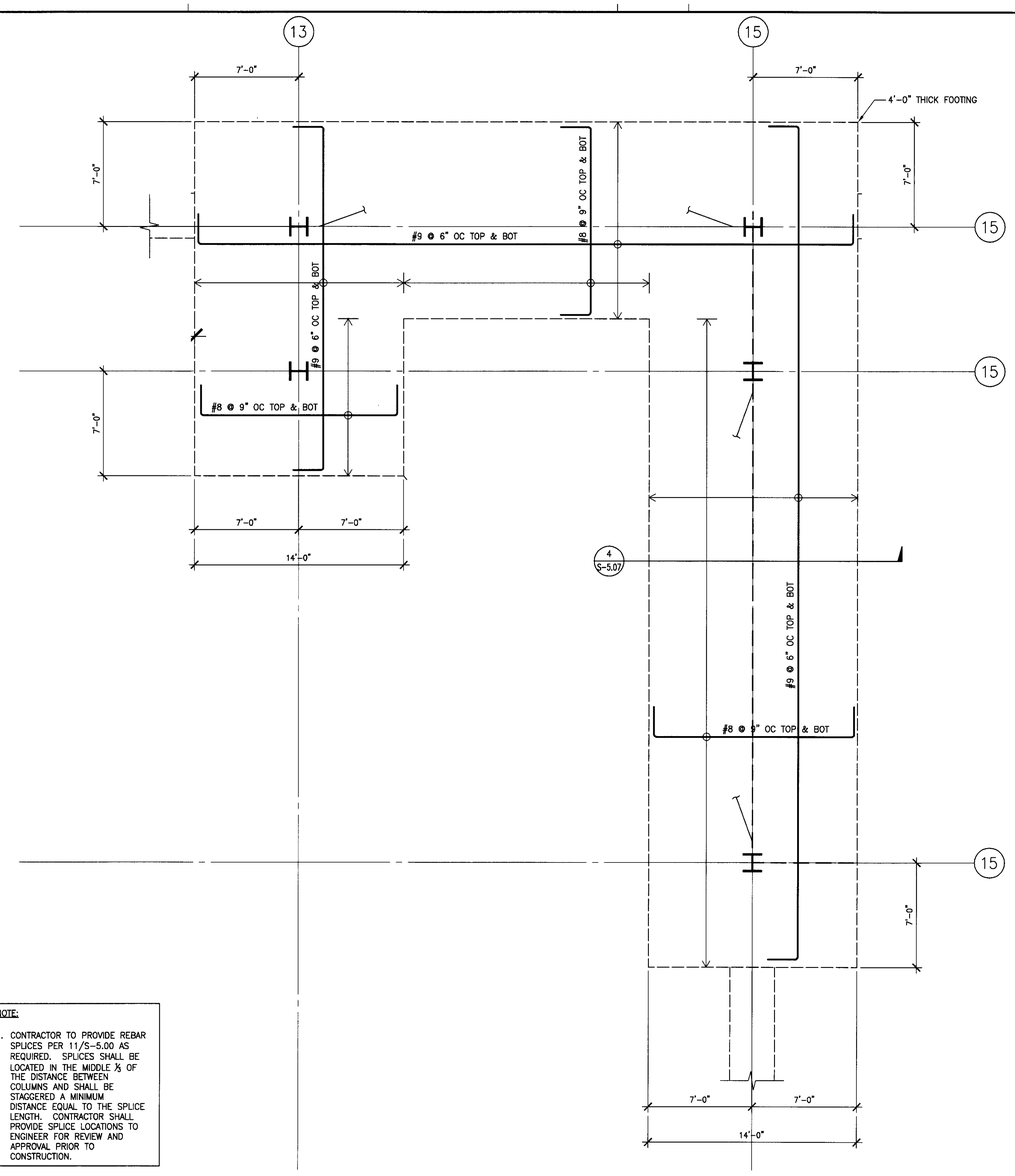

NOTE:

1. CONTRACTOR TO PROVIDE REBAR SPLICES PER 11/S-5.00 AS REQUIRED. SPLICES SHALL BE LOCATED IN THE MIDDLE ½ OF THE DISTANCE BETWEEN COLUMNS AND SHALL BE STAGGERED A MINIMUM DISTANCE EQUAL TO THE SPLICE LENGTH. CONTRACTOR SHALL PROVIDE SPLICE LOCATIONS TO ENGINEER FOR REVIEW AND APPROVAL PRIOR TO CONSTRUCTION.

PARTIAL FOUNDATION PLAN - FOOTING TYPE BF-12 1"=1'-0" 1

NOTE:

1. CONTRACTOR TO PROVIDE REBAR SPLICES PER 11/S-5.00 AS REQUIRED. SPLICES SHALL BE LOCATED IN THE MIDDLE ½ OF THE DISTANCE BETWEEN COLUMNS AND SHALL BE STAGGERED A MINIMUM DISTANCE EQUAL TO THE SPLICE LENGTH. CONTRACTOR SHALL PROVIDE SPLICE LOCATIONS TO ENGINEER FOR REVIEW AND APPROVAL PRIOR TO CONSTRUCTION.

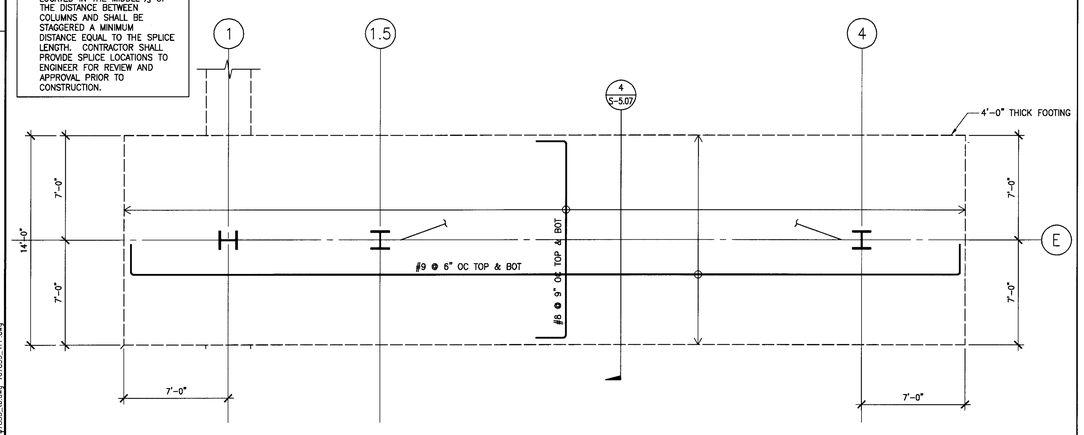

PARTIAL FOUNDATION PLAN - FOOTING TYPE BF-15 1"=1'-0" 4

NOTE:

1. CONTRACTOR TO PROVIDE REBAR SPLICES PER 11/S-5.00 AS REQUIRED. SPLICES SHALL BE LOCATED IN THE MIDDLE ½ OF THE DISTANCE BETWEEN COLUMNS AND SHALL BE STAGGERED A MINIMUM DISTANCE EQUAL TO THE SPLICE LENGTH. CONTRACTOR SHALL PROVIDE SPLICE LOCATIONS TO ENGINEER FOR REVIEW AND APPROVAL PRIOR TO CONSTRUCTION.

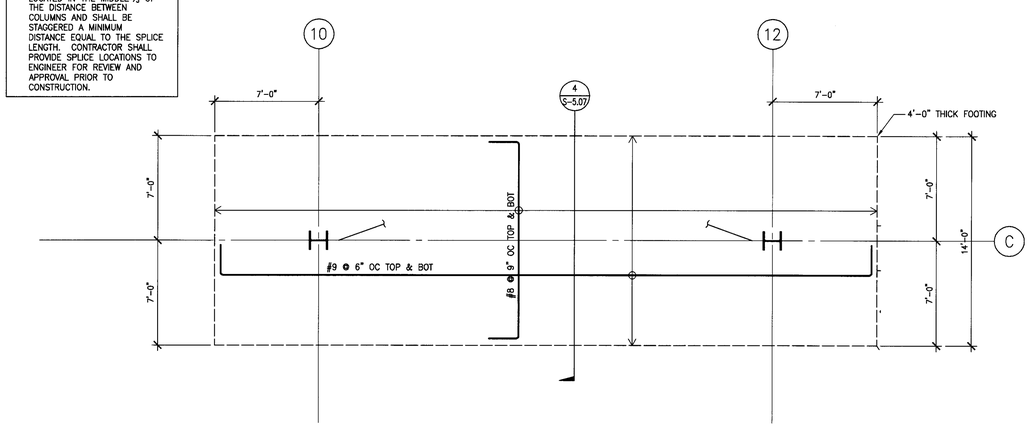

PARTIAL FOUNDATION PLAN - FOOTING TYPE BF-13 1"=1'-0" 2

tBP
architecture
planning
interiors
management

tBP/Architecture
5455 Wilshire Boulevard, Suite 1200
Los Angeles, CA 90036-4242
ph: 323. 556. 3788 fx: 323. 556. 3799

LICENSED ARCHITECT
No. C-14
STATE OF CALIFORNIA

architect

kpff Consulting Engineers
301 North Lake Avenue, Suite 500
Pasadena, California 91101
(626) 578-1121 Fax (626) 578-0121

REGISTERED PROFESSIONAL ENGINEER
No. S4399
Exp. 12/31/09
STRUCTURAL
STATE OF CALIFORNIA

consultant

IDENTIFICATION STAMP
DIV. OF THE STATE ARCHITECT
OFFICE OF REGULATION SERVICES
File No. 19-C11
Appl No. 03-112201
AC ___ RS ___ SS SGA
DATE 10-13-09

DSA Los Angeles Basin Regional Office
700 North Alameda Street, Suite 5-500
Los Angeles, California 90012
ph: 213/897-3995 fx: 213/897-3159/0726

agency

ANTELOPE VALLEY COLLEGE HEALTH & SCIENCE BUILDING

ANTELOPE VALLEY COMMUNITY COLLEGE DISTRICT
3041 WEST AVENUE K
LANCASTER, CA 93536-5426

owner

tBP project number : 206410.00

file name: S-504.DWG

drawn by: SG checked by: GD

date: JULY 30, 2009 - 100% CD

Rev:	date:	description:

THIS DRAWING AND THE DESIGNS, DEPICTIONS, IDEAS AND OTHER INFORMATION CONTAINED HEREIN CONSTITUTE UNPUBLISHED WORK OF tBP/ARCHITECTURE AND SHALL REMAIN THE PROPERTY OF tBP/ARCHITECTURE IN PERPETUITY. NO PART THEREOF SHALL BE REPRODUCED, DISCLOSED, DISTRIBUTED, SOLD, PUBLISHED OR OTHERWISE USED IN ANY WAY WITHOUT THE ADVANCED EXPRESS WRITTEN CONSENT OF tBP/ARCHITECTURE.

drawing title:
CONCRETE DETAILS

drawing no.:
S-5.05
drawing of

File: K:\20061\2007\107833 - Antelope Valley College - Health and Science Building\sdwrt\S-505.dwg
Plotted: 9/14/09 at 4:25pm By: JPONDICO
Plot Scale: 1:1 Plot Style: LTR3.ctb