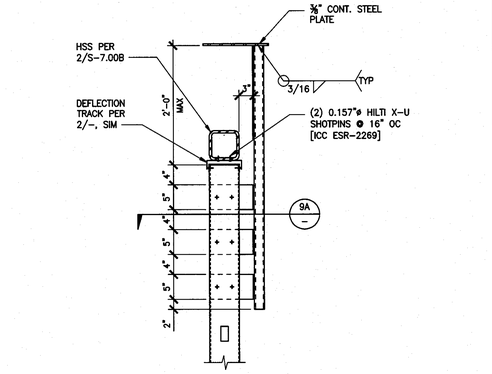

EXTERIOR WALL PARAPET DETAIL AT HSS TUBE 1"=1'-0" **10**

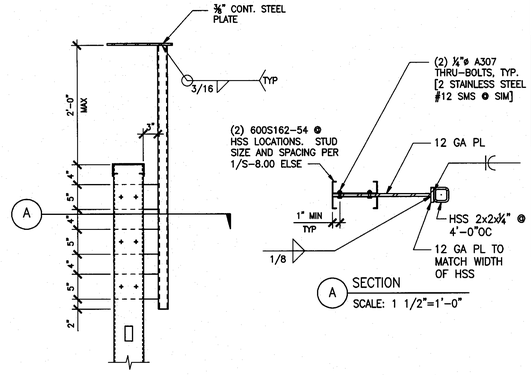

EXTERIOR WALL PARAPET DETAIL 1"=1'-0" **9**

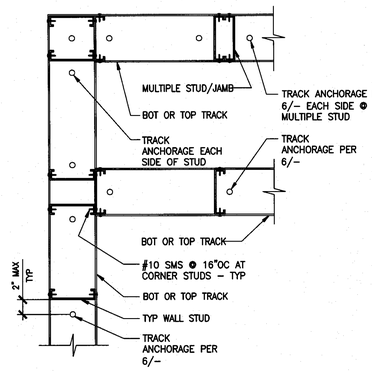

TYPICAL EXTERIOR WALL FRAMING - PLAN VIEW 1 1/2"=1'-0" **5**

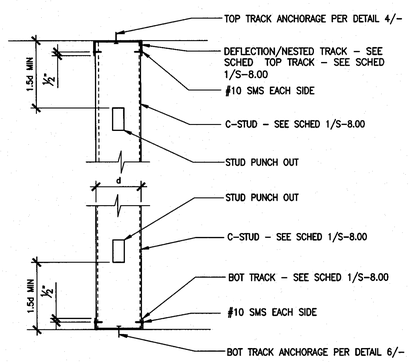

TYPICAL EXTERIOR WALL STUD 1 1/2"=1'-0" **1**

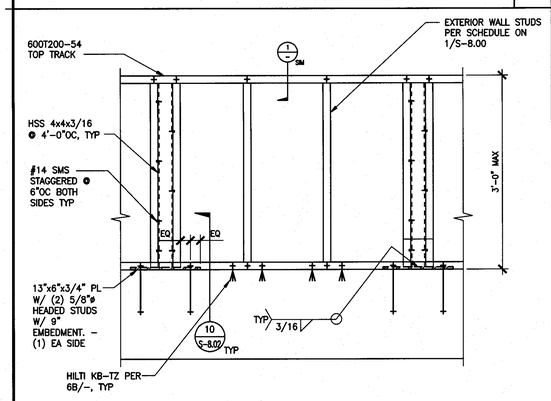

EXTERIOR STEM WALL DETAIL 1"=1'-0" **11**

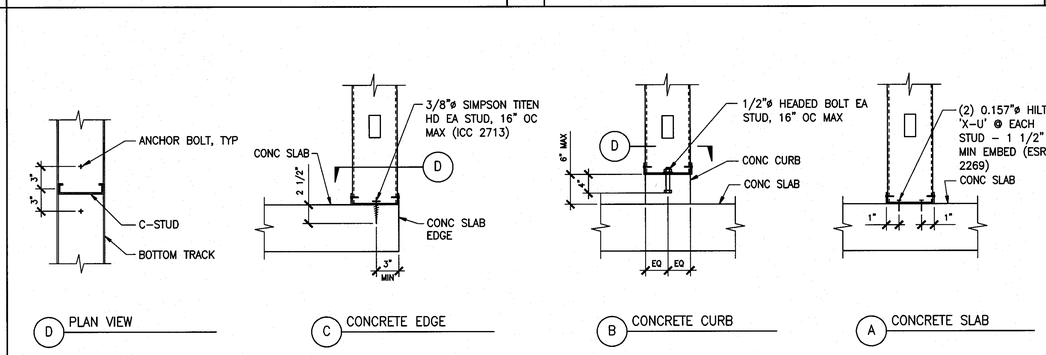

TYPICAL EXTERIOR BOTTOM TRACK ANCHORAGE 1 1/2"=1'-0" **6**

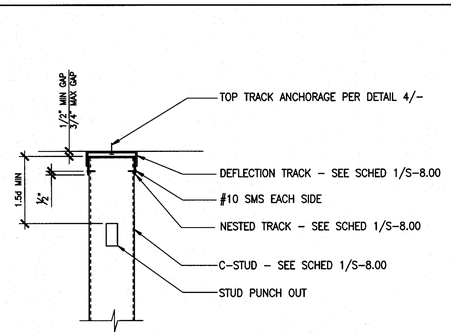

TYPICAL EXTERIOR DEFLECTION TRACK ASSEMBLY 1 1/2"=1'-0" **2**

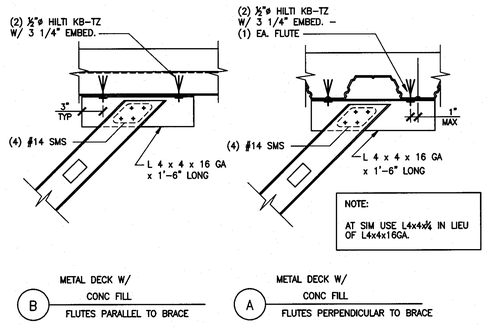

TYPICAL BRACE ANCHORAGE DETAIL AT DECK 1 1/2"=1'-0" **12**

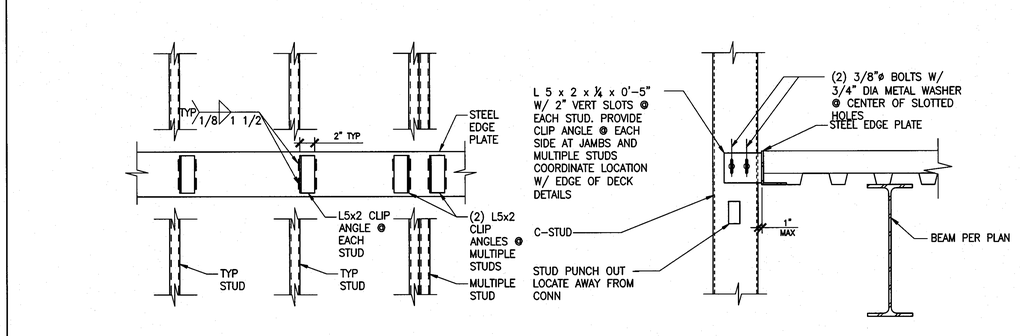

TYPICAL EXTERIOR WALL SLIP CLIP CONNECTION 1 1/2"=1'-0" **7**

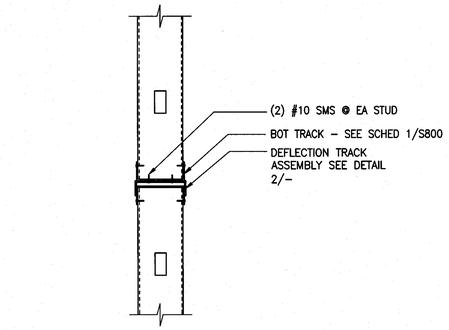

TYPICAL EXTERIOR SLIP TRACK AT STUD TO STUD 1 1/2"=1'-0" **3**

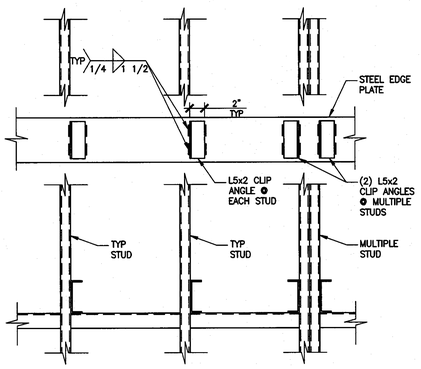

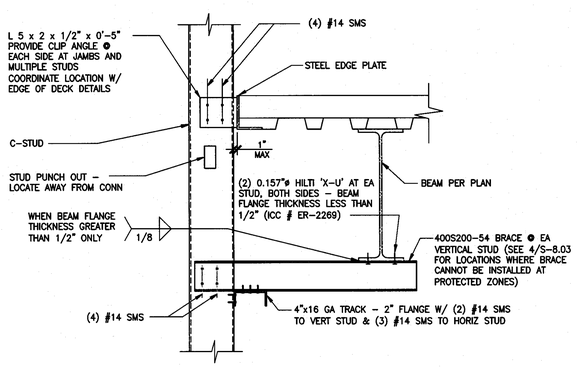

TYPICAL EXTERIOR WALL HANGING CLIP CONNECTION 1 1/2"=1'-0" **8**

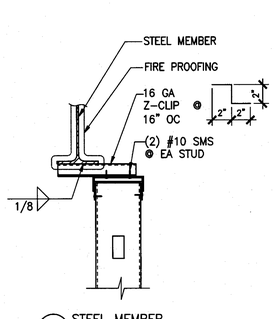

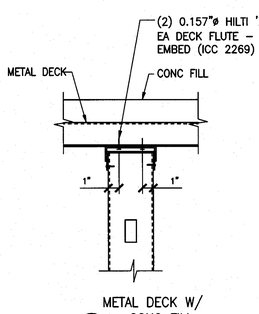

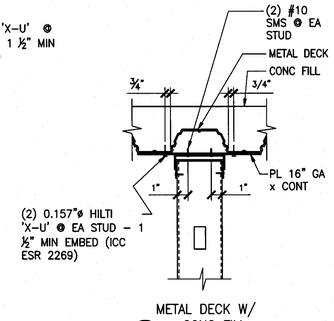

TYPICAL EXTERIOR TOP DEFLECTION TRACK ANCHORAGE 1 1/2"=1'-0" **4**

File: W:\2007\107833 - Antelope Valley College - Health and Science Building\ydraft\S-801.dwg
Plotted: 10/13/09 at 1:23pm By: cvallado
Layout: S-8.01 Bldg

tBP
architecture
planning
interiors
management

tBP/Architecture
5455 Wilshire Boulevard, Suite 1200
Los Angeles, CA 90036-4242
ph: 323. 556. 3788 fx: 323. 556. 3799

LICENSED ARCHITECT
NO. 18000
STATE OF CALIFORNIA

architect

kpff Consulting Engineers
301 North Lake Avenue, Suite 600
Pasadena, California 91101
626.578-1800 Fax 626.578-0481

REGISTERED PROFESSIONAL ENGINEER
NORMAN C. DYE
No. 046399
Exp. 12/31/09
STRUCTURAL
STATE OF CALIFORNIA

consultant

IDENTIFICATION STAMP
DIV. OF THE STATE ARCHITECT
OFFICE OF REGULATION SERVICES
File No. 19-C11
Appl No. 03-112201
AC ___ FLS ___ SS SGR
DATE 10.13.09

DSA Los Angeles Basin Regional Office
700 North Alameda Street, Suite 5-500
Los Angeles, California 90012
ph: 213/897-3995 fx: 213/897-3159/0726

agency

ANTELOPE VALLEY COLLEGE HEALTH & SCIENCE BUILDING

ANTELOPE VALLEY COMMUNITY COLLEGE DISTRICT
3041 WEST AVENUE K
LANCASTER, CA 93536-5426

owner

tBP project number : 206410.00
file name: S-801.DWG
drawn by: CV checked by: GD
date: JULY 30, 2009 - 100% CD

Rev:	date:	description:

THIS DRAWING AND THE DESIGNS, DEFECTIONS, IDEAS AND OTHER INFORMATION CONTAINED HEREIN CONSTITUTE UNPUBLISHED WORK OF tBP/ARCHITECTURE AND SHALL REMAIN THE PROPERTY OF tBP/ARCHITECTURE IN PERPETUITY. NO PART THEREOF SHALL BE REPRODUCED, DISCLOSED, DISTRIBUTED, SOLD, PUBLISHED OR OTHERWISE USED IN ANY WAY WITHOUT THE ADVANCED EXPRESS WRITTEN CONSENT OF tBP/ARCHITECTURE.

drawing title:
TYP EXTERIOR METAL STUD WALL DETAILS

drawing no:
S-8.01
drawing of