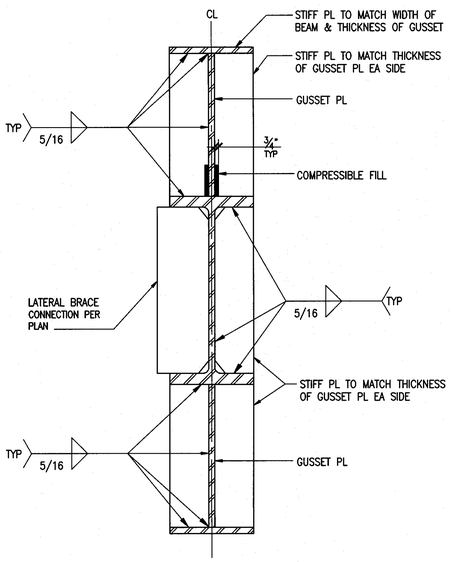

E SECTION

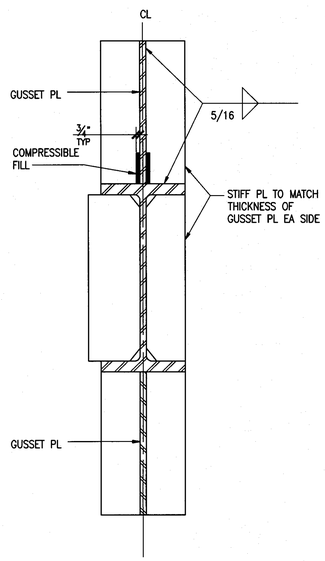

F SECTION

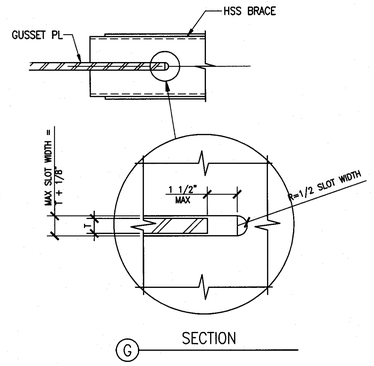

G SECTION

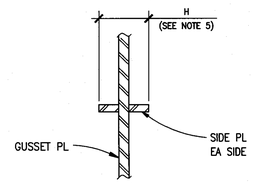

H SECTION

CONNECTION ID	REF DETAIL	PLATE THICKNESS			WELD THICKNESS		PLATE INTERFACE LENGTH (in.)	
		GUSSET (T)	SIDE	STIFFENER	T1	T2	L1	L2
C1	B	1 1/2	–	1 1/2	5/8	3/4	32	98
C2	B	1 1/2	–	1 1/2	5/8	7/8	32	91
C3	B	1 1/2	3/4	1 1/2	5/8	7/8	32	88
C4	A	1 1/2	3/4	1 1/2	5/8	7/8	32	87
C5	B	1 1/2	–	1 1/2	5/8	7/8	32	102
C6	B	1 1/2	–	1 1/2	5/8	3/4	32	105
C7	B	1 1/2	–	1 1/2	1/2	1/2	29	94
C8	B	1 1/2	–	1 1/2	1/2	1/2	29	95
C9	B	1 1/2	–	1 1/2	5/8	3/4	32	108
C10	B	1 1/2	–	1 1/2	5/8	3/4	32	112
C11	B	1 1/2	–	1 1/2	1/2	5/8	29	81
C12	B	1 1/2	–	1 1/2	1/2	5/8	29	92
C13	B	1 1/2	–	1 1/2	1/2	5/8	29	100
C14	B	1 1/2	–	1 1/2	1/2	5/8	29	97
C15	B	1 1/2	–	1 1/2	1/2	3/4	29	86
C16	A	1 1/2	–	1 1/2	1/2	5/8	29	85
C17	B	1 1/2	–	1 1/2	1/2	5/8	29	87
C18	B	1 1/2	–	1 1/2	1/2	1/2	29	97
C19	B	1 1/2	–	1 1/2	1/2	5/8	29	91
C20	B	1 1/2	–	1 1/2	1/2	5/8	29	90
C21	B	1 1/2	–	1 1/2	1/2	5/8	29	87
C22	B	1 1/2	–	1 1/2	1/2	5/8	29	91
C23	B	1 1/2	–	1 1/2	1/2	5/8	29	92
C24	B	1 1/2	–	1 1/2	1/2	5/8	29	88
C25	B	1 1/2	–	1 1/2	1/2	5/8	29	89
C26	B	1 1/2	–	1 1/2	1/2	5/8	29	91
C27	B	1 1/2	–	1 1/2	1/2	1/2	29	97
C28	B	1 1/2	–	1 1/2	1/2	1/2	29	110

NOTES:

1. ALL PLATE MATERIAL TO BE ASTM A572 GR50 STEEL.
2. "3T" INDICATES 3 TIMES THE GUSSET PLATE THICKNESS PER SCHEDULE.
3. SHOP DRAWINGS SHALL BE SUBMITTED TO SCALE FOR REVIEW AND APPROVAL. SEE S-6.04A FOR SHOP DRAWINGS SUBMITTAL REQUIREMENTS.
4. BRACES MAY OCCUR ABOVE AND BELOW, ONLY ABOVE, OR ONLY BELOW. SEE BRACED FRAME ELEVATION FOR BRACE CONFIGURATION.
5. H SHALL MATCH THE WIDTH OF THE BRACE.
6. CONNECTIONS SHOWN SHALL CONFORM TO SEISMIC LOAD RESISTING NOTES ON S-0.00.

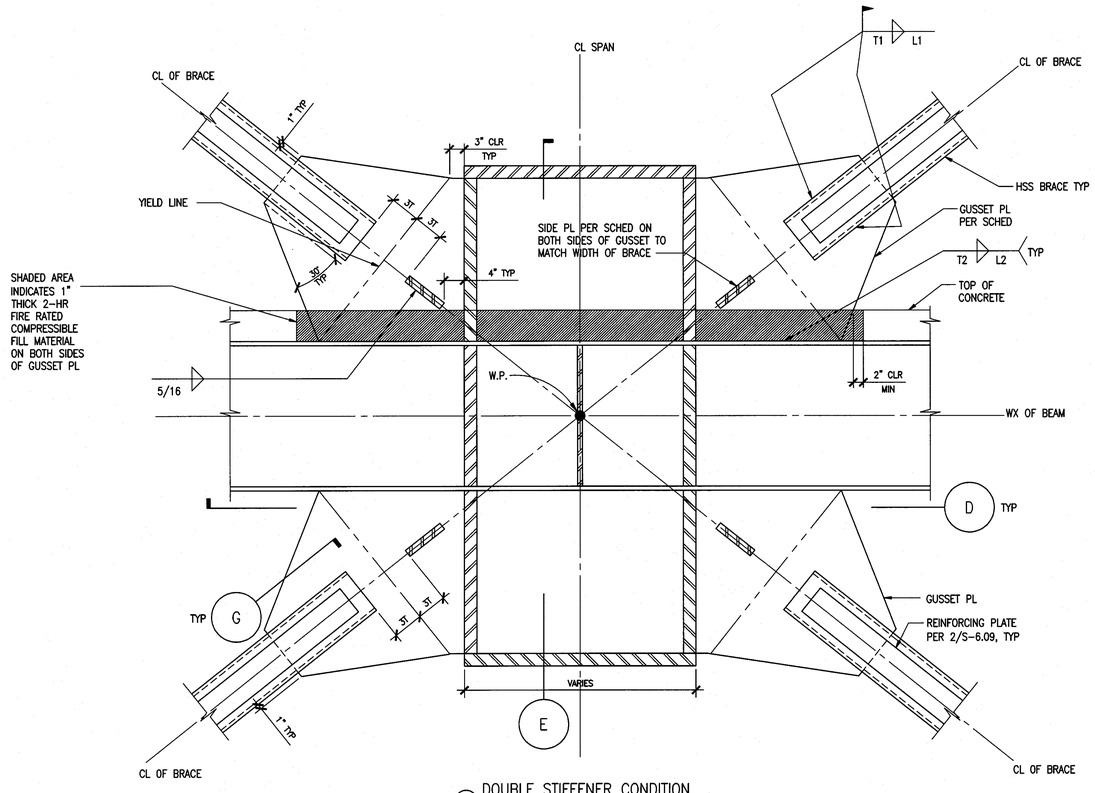

B DOUBLE STIFFENER CONDITION

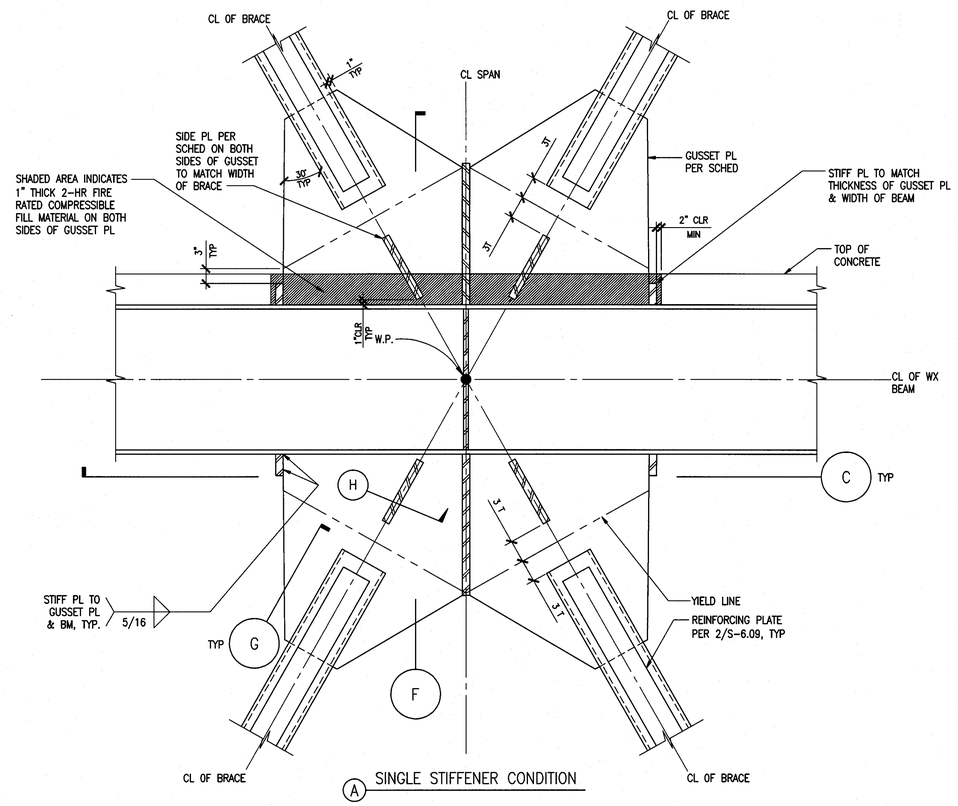

A SINGLE STIFFENER CONDITION

NOTE:
SEE DOUBLE STIFFENER CONDITION FOR BALANCE OF INFO NOT NOTED.

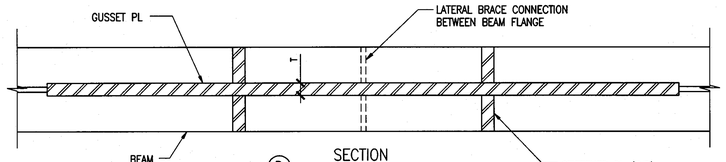

D SECTION

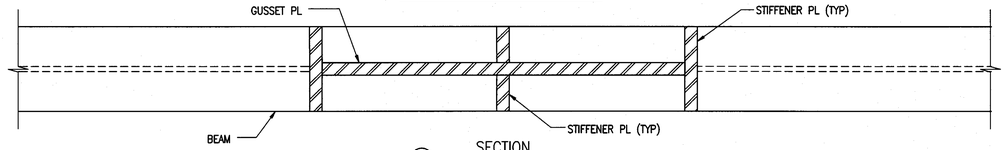

C SECTION

GUSSET CONNECTION DETAIL - TYPE C

1"=1'-0" | 1

tBP
architecture
planning
interiors
management

tBP/Architecture
5455 Wilshire Boulevard, Suite 1200
Los Angeles, CA 90036-4242
ph: 323. 556. 3788 fx: 323. 556. 3799

LICENSED ARCHITECT
STATE OF CALIFORNIA

architect

kpff Consulting Engineers
301 North Lake Avenue, Suite 500
Pasadena, California 91101
626) 578-921 Fax (626) 578-921

REGISTERED PROFESSIONAL ENGINEER
No. S4309
Exp. 12/31/09
STRUCTURAL
STATE OF CALIFORNIA

consultant

IDENTIFICATION STAMP
DIV. OF THE STATE ARCHITECT
OFFICE OF REGULATION SERVICES
File No. 19-C11
Appl No. 03-112201
AC ___ RS ___ SS S.E.P.
DATE 10.13-09

DSA Los Angeles Basin Regional Office
700 North Alameda Street, Suite 5-500
Los Angeles, California 90012
ph: 213/897-3995 fx: 213/897-3159/0726

agency

ANTELOPE VALLEY COLLEGE HEALTH & SCIENCE BUILDING

ANTELOPE VALLEY COMMUNITY COLLEGE DISTRICT
3041 WEST AVENUE K
LANCASTER, CA 93536-5426

owner

tBP project number : 2064L00
file name: S-607.DWG
drawn by: SG checked by: GD
date: JULY 30, 2009 - 100% CD

Rev:	date:	description:

THIS DRAWING AND THE DESIGNS, DEPICTIONS, IDEAS AND OTHER INFORMATION CONTAINED HEREIN CONSTITUTE UNPUBLISHED WORK OF tBP/ARCHITECTURE AND SHALL REMAIN THE PROPERTY OF tBP/ARCHITECTURE IN PERPETUITY. NO PART THEREOF SHALL BE REPRODUCED, DISCLOSED, DISTRIBUTED, SOLD, PUBLISHED OR OTHERWISE USED IN ANY WAY WITHOUT THE ADVANCED EXPRESS WRITTEN CONSENT OF tBP/ARCHITECTURE.

drawing title:
BRACE FRAME CONNECTION DETAILS

drawing no.:
S-6.07
drawing of

File: W:\2007\107033 - Antelope Valley College - Health and Science Building\acad\S-607.dwg
Plotted: 9/16/09 at 1:22pm By: cvallejo
XREFs: 107033_tb.dwg