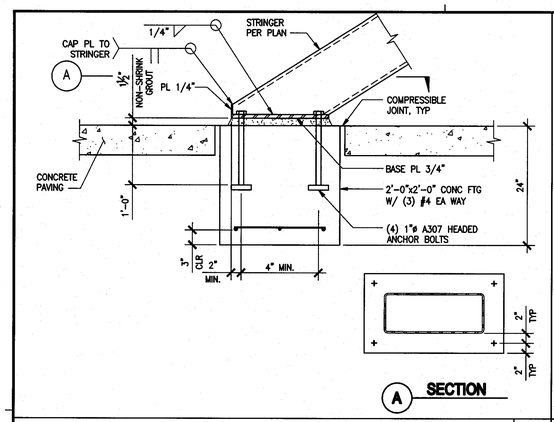

STAIR #4 FOOTING @ STRINGER 1"=1'-0" 10

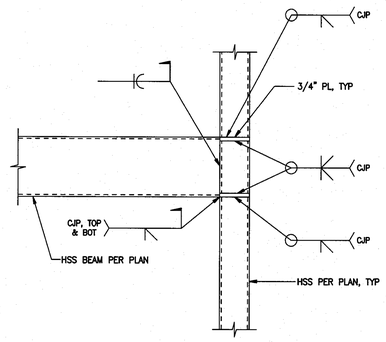

TYPICAL HSS LANDING BEAM TO HSS POST 1"=1'-0" 6

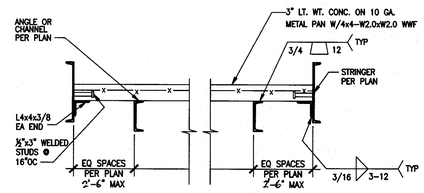

LANDING SECTION 1"=1'-0" 3

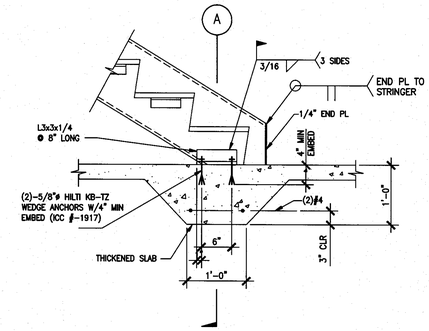

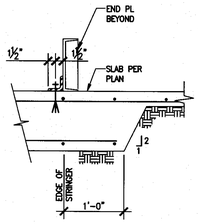

A SECTION
SCALE: 1"=1'-0"

STAIR STRINGER TO FLOOR CONNECTION 1"=1'-0" 1

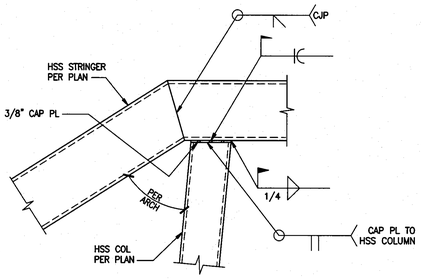

STRINGER @ TILT COLUMN CONNECTION 1"=1'-0" 11

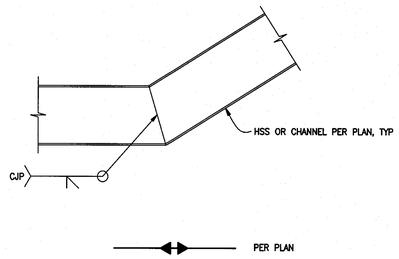

TYPICAL HSS OR CHANNEL SPLICE CONNECTION 1"=1'-0" 7

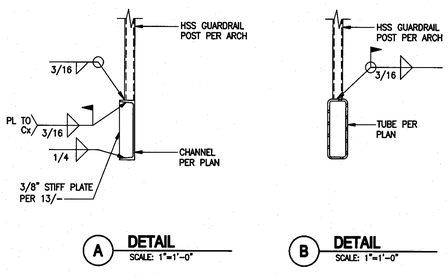

TYPICAL GUARDRAIL CONNECTION 1"=1'-0" 8

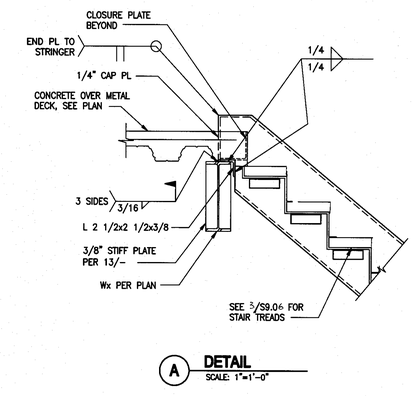

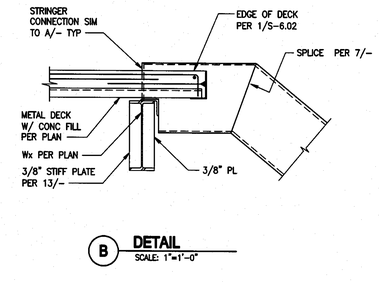

DETAIL 1"=1'-0" 2

1"=1'-0"

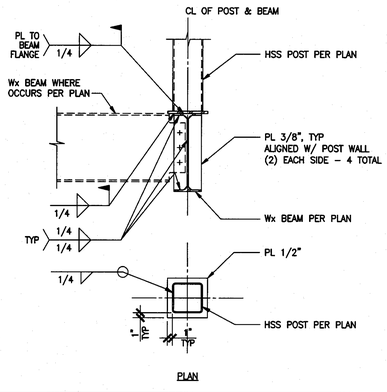

TYP GRAVITY COLUMN TO TRANSFER BEAM BASE PLATE DETAIL 1"=1'-0" 13

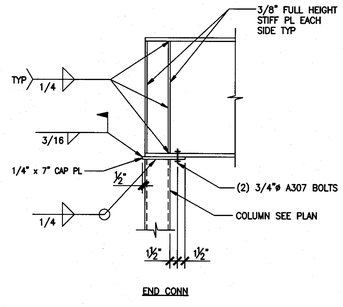

TYPICAL STEEL BEARING CONNECTION - BEAM TO COLUMN 1"=1'-0" 9

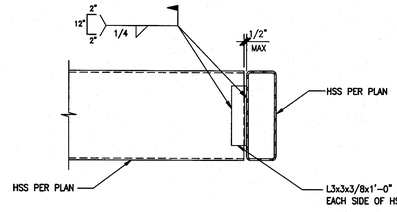

HSS BEAM TO HSS BEAM CONNECTIONS 1"=1'-0" 5

NOT USED 1"=1'-0" 4

tBP
architecture
planning
interiors
management

tBP/Architecture
5455 Wilshire Boulevard, Suite 1200
Los Angeles, CA 90036-4242
ph: 323. 556. 3788 fx: 323. 556. 3799

LICENSED ARCHITECT
NO. C-18611
STATE OF CALIFORNIA

architect

kpff Consulting Engineers
501 North Lake Avenue, Suite 550
Pasadena, California 91101
626/50 570-1121 Fax 626/50 570-0421

REGISTERED PROFESSIONAL ENGINEER
ALIREZA MAHDAVI
No. S4309
Exp. 12/31/09
STRUCTURAL
STATE OF CALIFORNIA

consultant

IDENTIFICATION STAMP
DIV. OF THE STATE ARCHITECT
OFFICE OF REGULATION SERVICES
File No. 19-C11
Appl No. 03-112201
AC ___ RLS ___ SS SLR
DATE 10 13 09

DSA Los Angeles Basin Regional Office
700 North Alameda Street, Suite 5-500
Los Angeles, California 90012
ph: 213/897-3995 fx: 213/897-3159/0726

agency

ANTELOPE VALLEY COLLEGE
HEALTH & SCIENCE BUILDING
ANTELOPE VALLEY COMMUNITY COLLEGE DISTRICT
3041 WEST AVENUE K
LANCASTER, CA 93536-5426

owner

tBP project number : 20641.00
file name: S-102.DWG
drawn by: SG checked by: GD
date: JULY 30, 2009 - 100% CD

Rev:	date:	description:

THIS DRAWING AND THE DESIGNS, DEPICTIONS, IDEAS AND OTHER INFORMATION CONTAINED HEREIN CONSTITUTE UNPUBLISHED WORK OF tBP/ARCHITECTURE AND SHALL REMAIN THE PROPERTY OF tBP/ARCHITECTURE IN PERPETUITY. NO PART THEREOF SHALL BE REPRODUCED, DISCLOSED, DISTRIBUTED, SOLD, PUBLISHED OR OTHERWISE USED IN ANY WAY WITHOUT THE ADVANCED EXPRESS WRITTEN CONSENT OF tBP/ARCHITECTURE.

drawing title:
STAIR DETAILS

drawing no:
S-9.04
drawing of

File: M:\20071\107031 - Antelope Valley College - Health and Science Building\detail\S-904.dwg
Plotted: 11/09/09 12:24pm By: cristina
XREF: 1-7355.lb.dwg