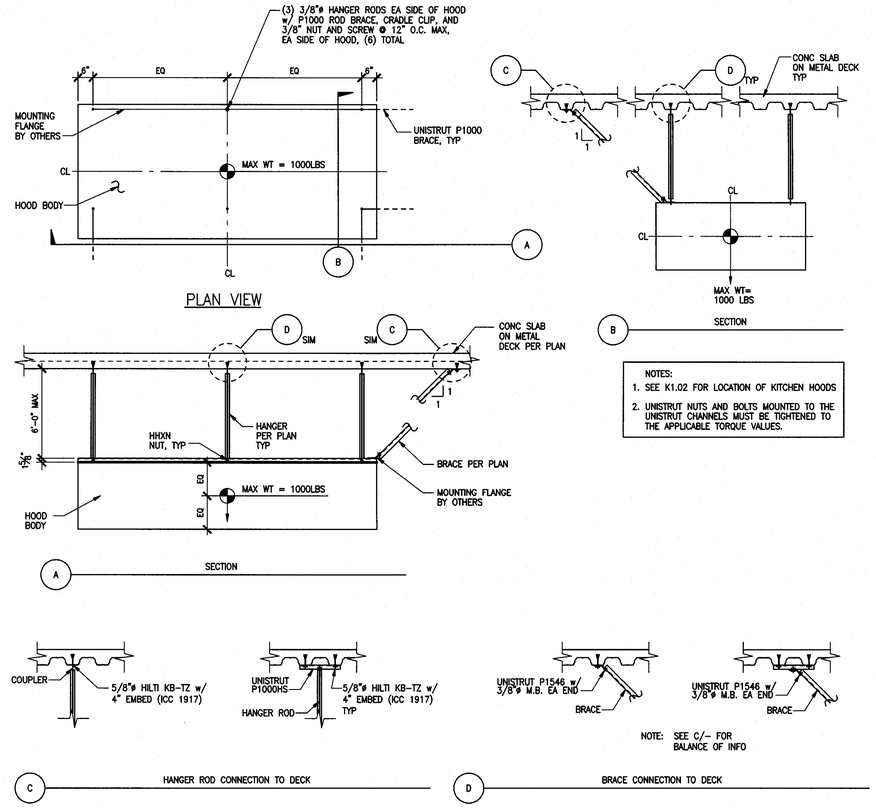

KITCHEN HOOD SUPPORT ? BRACING 1/2"=1'-0" **4**

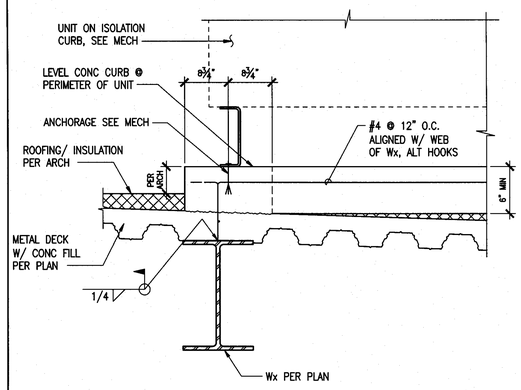

AIR HANDLER UNIT ANCHORAGE 1"=1'-0" **1**

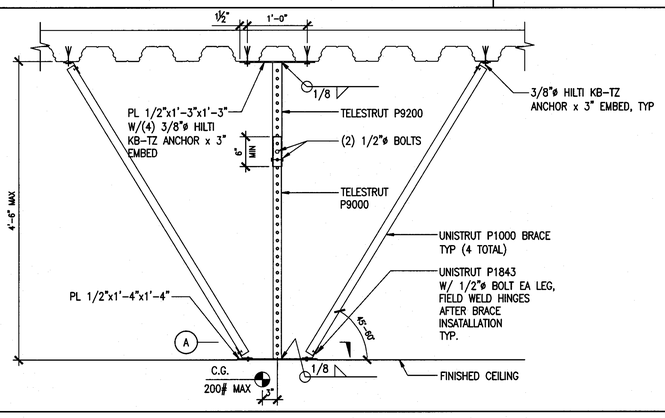

SUSPENDED AV DETAIL 1"=1'-0" **7**

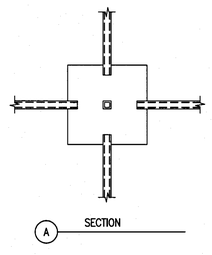

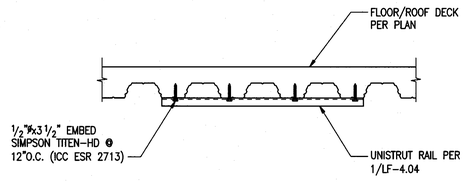

UNISTRUT RAIL TO FLOOR/ROOF DETAIL 1"=1'-0" **5**

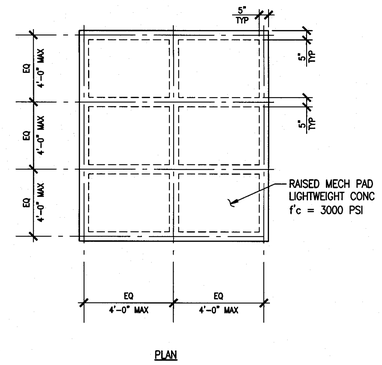

ROOF MECHANICAL PAD DETAIL 1/2"=1'-0" **2**

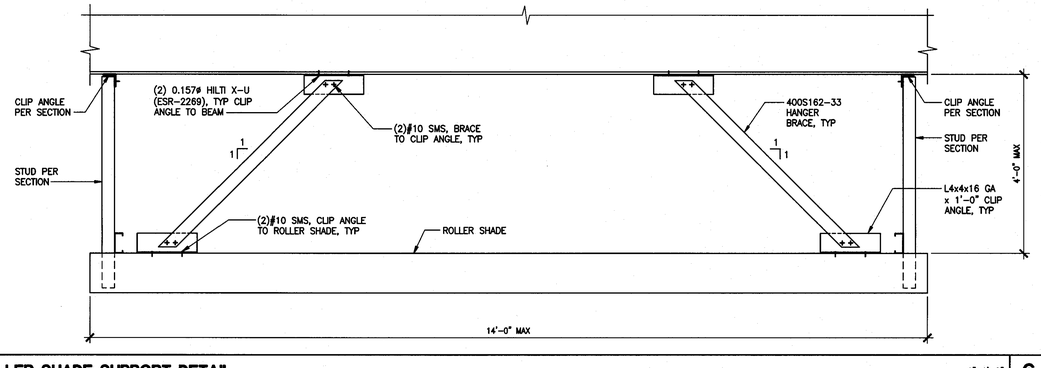

ROLLER SHADE SUPPORT DETAIL 1"=1'-0" **6**

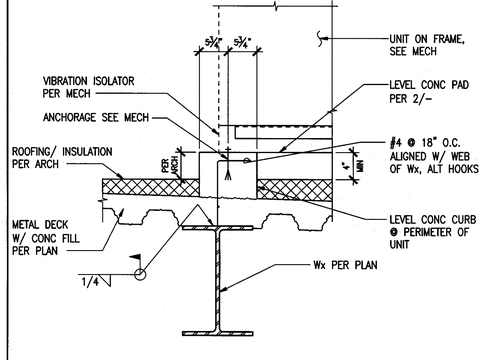

CONDENSER UNIT ANCHORAGE 1"=1'-0" **3**

tBP architecture planning interiors management
tBP/Architecture
5455 Wilshire Boulevard, Suite 1200
Los Angeles, CA 90036-4242
ph: 323. 556. 3788 fx: 323. 556. 3799
architect

kpff Consulting Engineers
301 North Lake Avenue, Suite 550
Pasadena, California 91101
626) 578-1921 Fax: 626) 578-0481
consultant

IDENTIFICATION STAMP
DIV. OF THE STATE ARCHITECT
OFFICE OF REGULATION SERVICES
File No. 19-C11
Appl No. 03-112281
AC ___ FLS ___ SS See
DATE 10.13.09

DSA Los Angeles Basin Regional Office
700 North Alameda Street, Suite 5-500
Los Angeles, California 90012
ph: 213/897-3995 fx: 213/897-3159/0726
agency

ANTELOPE VALLEY COLLEGE HEALTH & SCIENCE BUILDING

ANTELOPE VALLEY COMMUNITY COLLEGE DISTRICT
3041 WEST AVENUE K
LANCASTER, CA 93536-5426
owner

tBP project number : 20641.00
file name: S-610.DWG
drawn by: CV checked by: GD
date: JULY 30, 2009 - 100% CD

Rev:	date:	description:

THIS DRAWING AND THE DESIGNS, DEPICTIONS, IDEAS AND OTHER INFORMATION CONTAINED HEREIN CONSTITUTE UNPUBLISHED WORK OF tBP/ARCHITECTURE AND SHALL REMAIN THE PROPERTY OF tBP/ARCHITECTURE IN PERPETUITY. NO PART THEREOF SHALL BE REPRODUCED, DISCLOSED, DISTRIBUTED, SOLD, PUBLISHED OR OTHERWISE USED IN ANY WAY WITHOUT THE ADVANCED EXPRESS WRITTEN CONSENT OF tBP/ARCHITECTURE.

drawing title:
EQUIPMENT ANCHORAGE DETAILS

drawing no:
S-6.10
drawing of

File: W:\20071.107833 - Antelope Valley College - Health and Science Building\sheet\S-610.dwg
Plotted: 9/16/09 at 1:22pm By: cvallejo
XREFs: tB2S3_Ub.dwg