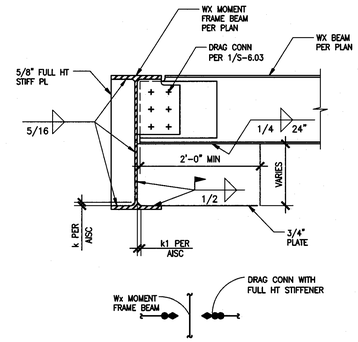

A DRAG CONN WITH FULL HT STIFFENER AT MOMENT FRAME BEAM

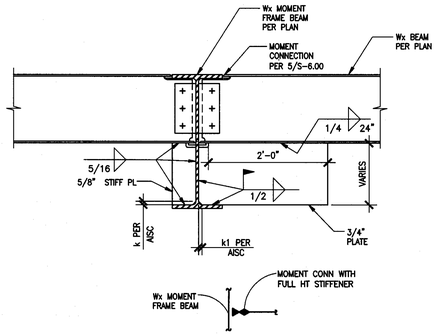

B MOMENT CONN WITH FULL HT STIFFENER AT MOMENT FRAME BEAM

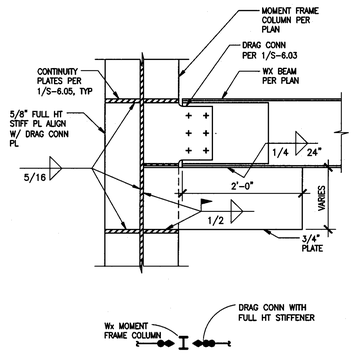

C DRAG CONN WITH FULL HT STIFFENER AT MOMENT FRAME COLUMN

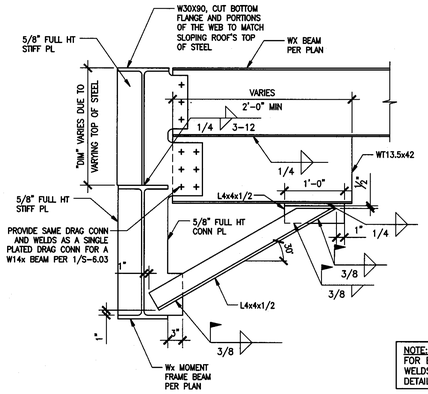

NOTE:
FOR BALANCE OF INFO ON WELDS NOW SHOWN, SEE DETAIL A.

D MOMENT FRAME BEAM BRACING DETAIL AT SLOPED ROOF "DIM" GREATER THAN 18"

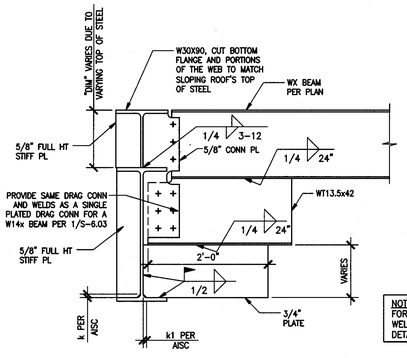

NOTE:
FOR BALANCE OF INFO ON WELDS NOW SHOWN, SEE DETAIL A.

E MOMENT FRAME BEAM BRACING DETAIL AT SLOPED ROOF "DIM" LESS THAN 18"

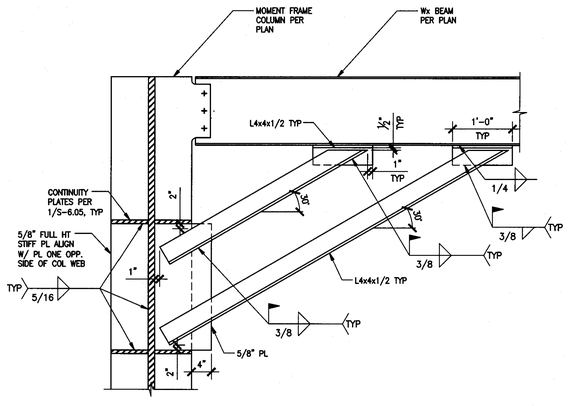

F MOMENT FRAME COLUMN BRACING DETAIL AT SLOPED ROOF

MOMENT FRAME BEAM AND COLUMN LATERAL BRACING DETAILS 1"=1'-0" 7

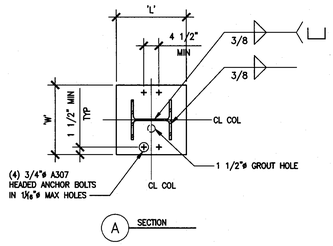

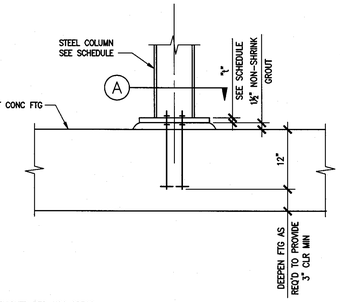

NOTES:
1. BASE PLATE SHALL BE FINISHED PER AISC SPECS.
2. COLUMN SHALL BE FINISHED PER AISC "CODE OF STANDARD PRACTICES"
3. SEE 1/S-5.01 FOR ISOLATION JOINT WHERE CONC SLAB ON GRADE OCCURS.
4. FOR BASE PLATE INFO SEE COLUMN SCHEDULE.

TYP GRAVITY COL BASE PLATE DETAIL 1"=1'-0" 1

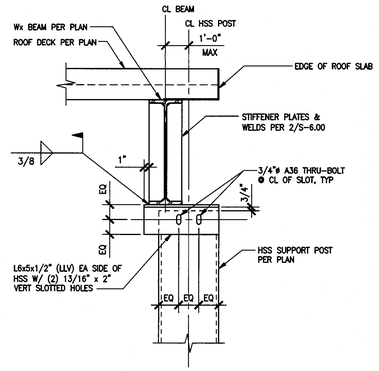

HSS SUPPORT POST AT FLOOR DECK 1"=1'-0" 5

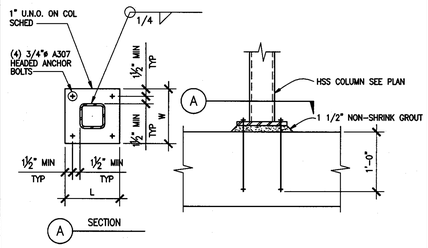

NOTES:
1. BASE PLATE SHALL BE FINISHED PER AISC SPECS.
2. COLUMN SHALL BE FINISHED PER AISC "CODE OF STANDARD PRACTICES".
3. FOR BASE PLATE INFO SEE COLUMN SCHEDULE.
4. PROVIDE 3" CONCRETE ENCASEMENT AROUND BASE PLATE AND POST WHERE BELOW EXISTING GRADE

TYPICAL HSS COLUMN BASE PLATE DETAIL 1"=1'-0" 2

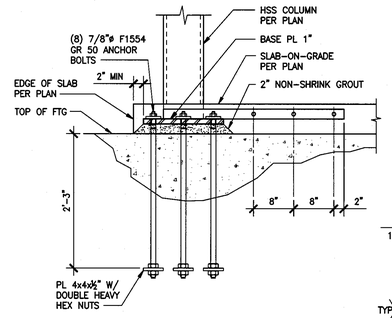

NOTE:
ALL PLATE MATERIAL TO BE ASIMA572 GR50.

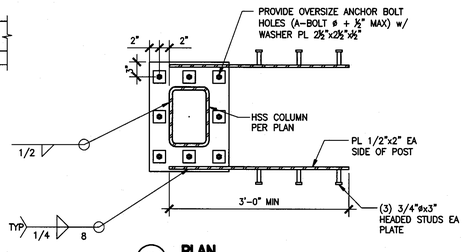

HSS MOMENT FRAME BASE PLATE DETAIL 1"=1'-0" 3

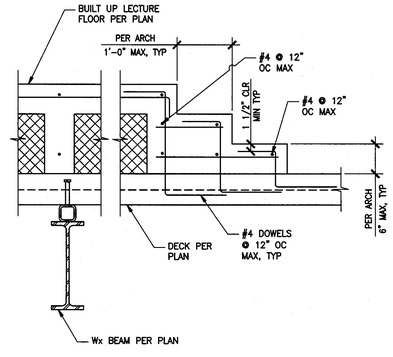

STEP DETAIL AT BUILT UP LECTURE FLOOR 1"=1'-0" 6

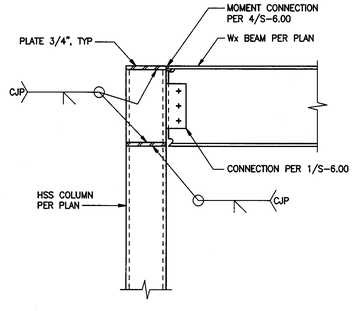

Wx BEAM TO HSS COL MOMENT CONNECTION 1"=1'-0" 4

tBP
architecture
planning
interiors
management

tBP/Architecture
5455 Wilshire Boulevard, Suite 1200
Los Angeles, CA 90036-4242
ph: 323. 556. 3788 fx: 323. 556. 3799

LICENSED ARCHITECT
STATE OF CALIFORNIA

architect

kpff Consulting Engineers
301 North Lake Avenue, Suite 500
Pasadena, California 91101
626)79-1101 Fax 626)79-0101

REGISTERED PROFESSIONAL ENGINEER
5399
Exp. 12/31/09
STRUCTURAL
STATE OF CALIFORNIA

consultant

IDENTIFICATION STAMP
DIV. OF THE STATE ARCHITECT
OFFICE OF REGULATION SERVICES
File No. 19-C11
Appl No. 03-112261
AC ___ RS ___ SS SLD
DATE 10-13-09

DSA Los Angeles Basin Regional Office
700 North Alameda Street, Suite 5-500
Los Angeles, California 90012
ph: 213/897-3995 fx: 213/897-3159/0726

agency

ANTELOPE VALLEY COLLEGE HEALTH & SCIENCE BUILDING

ANTELOPE VALLEY COMMUNITY COLLEGE DISTRICT
3041 WEST AVENUE K
LANCASTER, CA 93536-5426

owner

tBP project number : 20641.00
file name: S-603.DWG
drawn by: SG checked by: GD
date: JULY 30, 2009 - 100% CD

Rev:	date:	description:

THIS DRAWING AND THE DESIGNS, DEPICTIONS, IDEAS AND OTHER INFORMATION CONTAINED HEREIN CONSTITUTE UNPUBLISHED WORK OF tBP/ARCHITECTURE AND SHALL REMAIN THE PROPERTY OF tBP/ARCHITECTURE IN PERPETUITY. NO PART THEREOF SHALL BE REPRODUCED, DISCLOSED, DISTRIBUTED, SOLD, PUBLISHED OR OTHERWISE USED IN ANY WAY WITHOUT THE ADVANCED EXPRESS WRITTEN CONSENT OF tBP/ARCHITECTURE.

drawing title:
TYPICAL
STEEL DETAILS

drawing no:
S-6.02
drawing of

File: W:\2007\107833 - Antelope Valley College - Health and Science Building\sheet\S-602.dwg
Plotted: 7/16/09 at 1:22pm By: cvallejo
XREFs: 107833_tb.dwg