CONNECTION ID	REF DETAIL	PLATE THICKNESS			WELD THICKNESS			PLATE INTERFACE LENGTH (in.)		
		GUSSET (T)	STIFFENER	SIDE	T1	T2	T3	L1	L2	L3
B1	B	1 1/2	1 1/2	–	1/2	7/8	3/4	29	46	31
B2	B	1 1/2	1 1/2	3/4	5/8	CJP	7/8	32	50	35
B3	A	1 1/2	1 1/2	–	1/2	7/8	3/4	29	46	33
B4	B	1 1/2	1 1/2	–	1/2	1	3/4	29	49	29

NOTES:
1. ALL PLATES SHALL BE A572, GR 50 STEEL.
2. "3T" INIDICATES 3 TIMES THE GUSSET PLATE THICKNESS PER SCHEDULE
3. SHOP DRAWINGS SHALL BE SUBMITTED TO SCALE FOR REVIEW AND APPROVAL. SEE S-6.04A FOR SHOP DRAWING SUMITTAL REQUIREMENTS.
4. H SHALL MATCH THE DEPTH OF THE BRACE
5. CONNECTIONS SHOWN SHALL CONFORM TO SEISMIC LOAD RESISTING NOTES ON S-0.00.

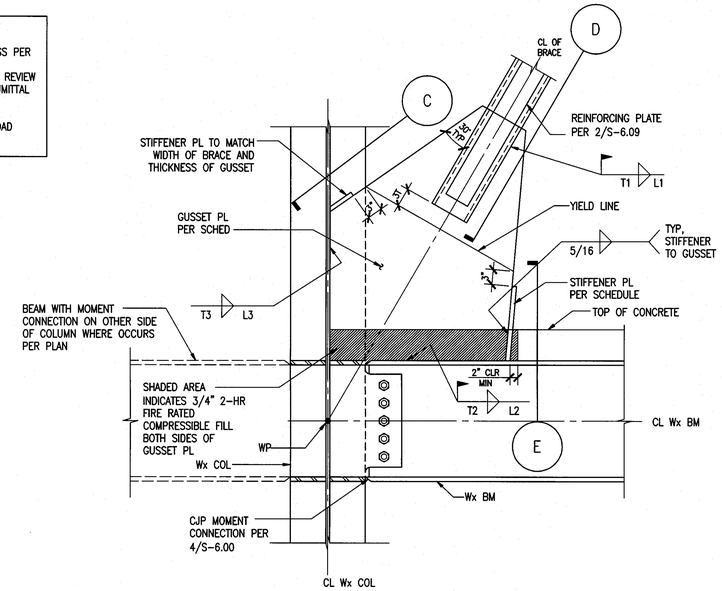

A GUSSET ABOVE BEAM / YIELD LINE @ COLUMN

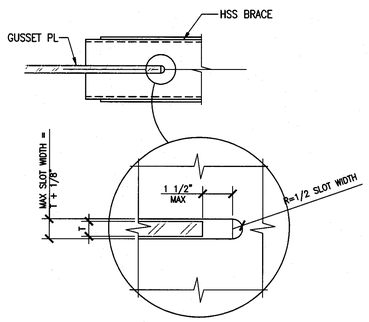

D SECTION

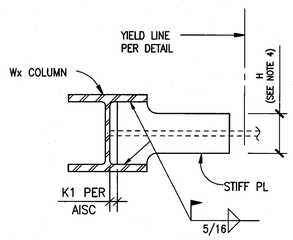

C SECTION

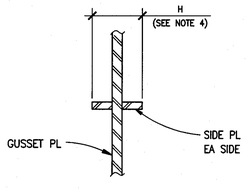

F SECTION

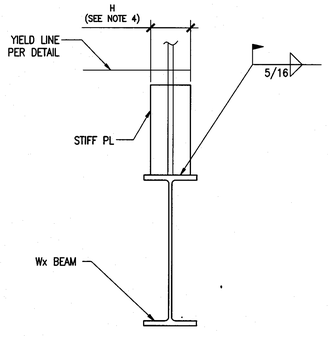

E SECTION

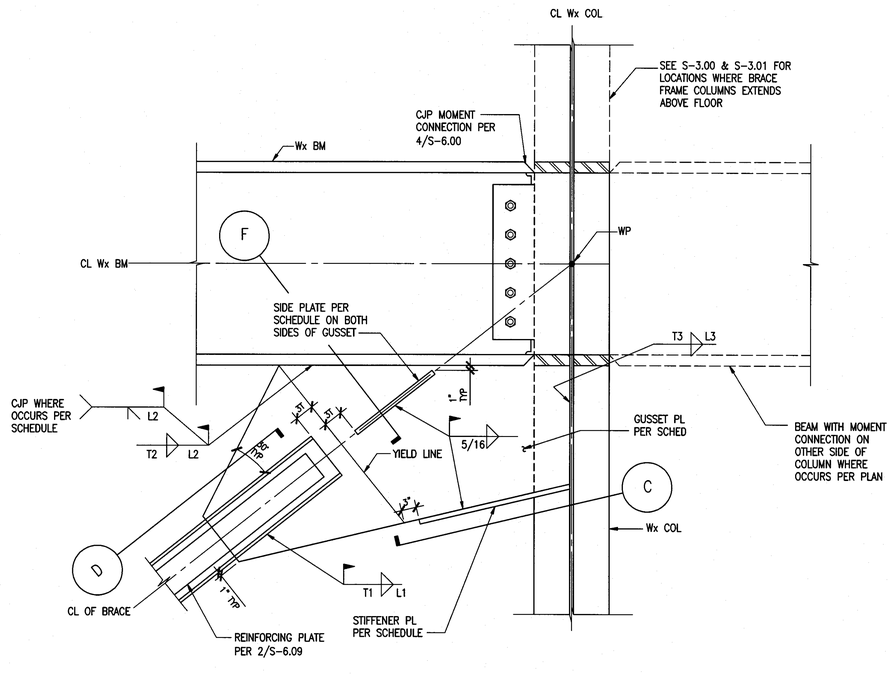

B GUSSET ABOVE BEAM / YIELD LINE @ BEAM

GUSSET CONNECTION DETAIL - TYPE B

1"=1'-0" | 1

File: W:\20071\107833 - Antelope Valley College - Health and Science Building\sheet\S-606.dwg
Plotted: 9/16/09 at 1:22pm By: cvallejo
XREFS: 107833_TB.dwg

tBP
architecture
planning
interiors
management

tBP/Architecture
5455 Wilshire Boulevard, Suite 1200
Los Angeles, CA 90036-4242
ph: 323. 556. 3788 fx: 323. 556. 3799

LICENSED ARCHITECT — STATE OF CALIFORNIA

architect

kpff Consulting Engineers
301 North Lake Avenue, Suite 500
Pasadena, California 91101
626) 578-181 Fax (626) 578-181

REGISTERED PROFESSIONAL ENGINEER — STRUCTURAL — STATE OF CALIFORNIA
No. S4399
Exp. 12/31/09

consultant

IDENTIFICATION STAMP
DIV. OF THE STATE ARCHITECT
OFFICE OF REGULATION SERVICES
File No. 19-C11
Appl No. 03-112201
AC ___ RLS ___ SS -S.P.-
DATE 10.13.09

DSA Los Angeles Basin Regional Office
700 North Alameda Street, Suite 5-500
Los Angeles, California 90012
ph: 213/897-3995 fx: 213/897-3159/0726

agency

ANTELOPE VALLEY COLLEGE HEALTH & SCIENCE BUILDING

ANTELOPE VALLEY COMMUNITY COLLEGE DISTRICT
3041 WEST AVENUE K
LANCASTER, CA 93536-5426

owner

tBP project number : 20641.00
file name: S-606.DWG
drawn by: SG checked by: GD
date: JULY 30, 2009 - 100% CD

Rev:	date:	description:

THIS DRAWING AND THE DESIGNS, DEPICTIONS, IDEAS AND OTHER INFORMATION CONTAINED HEREIN CONSTITUTE UNPUBLISHED WORK OF tBP/ARCHITECTURE AND SHALL REMAIN THE PROPERTY OF tBP/ARCHITECTURE IN PERPETUITY. NO PART THEREOF SHALL BE REPRODUCED, DISCLOSED, DISTRIBUTED SOLD, PUBLISHED OR OTHERWISE USED IN ANY WAY WITHOUT THE ADVANCED EXPRESS WRITTEN CONSENT OF tBP/ARCHITECTURE.

drawing title:
BRACE FRAME CONNECTION DETAILS

drawing no.:
S-6.06
drawing of