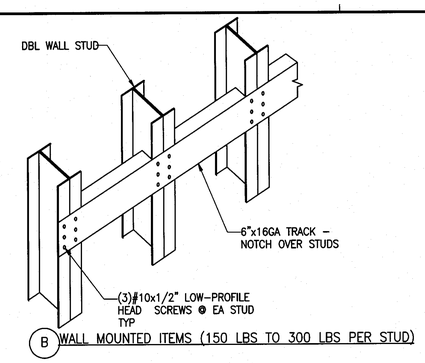

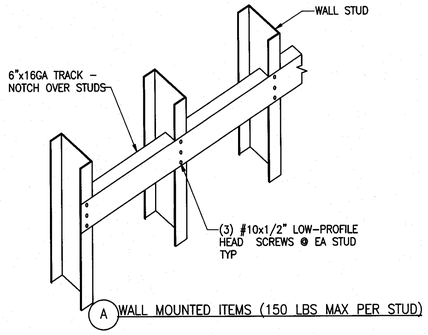

BACKING AT EQUIPMENT

METAL STUD BACKING DETAILS 1"=1'-0" **8**

NOT USED **4**

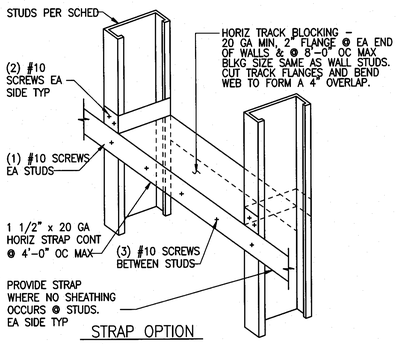

STRAP OPTION

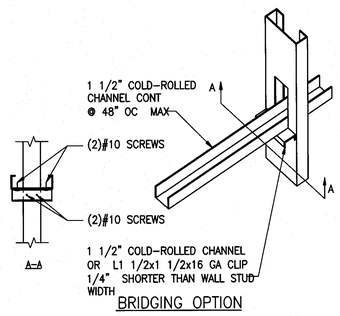

BRIDGING OPTION

METAL STUD BRIDGING DETAILS 1"=1'-0" **9**

NOT USED **5**

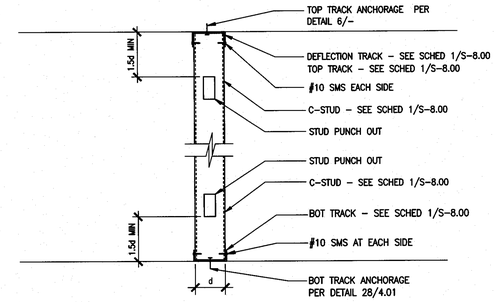

FULL HEIGHT WALL

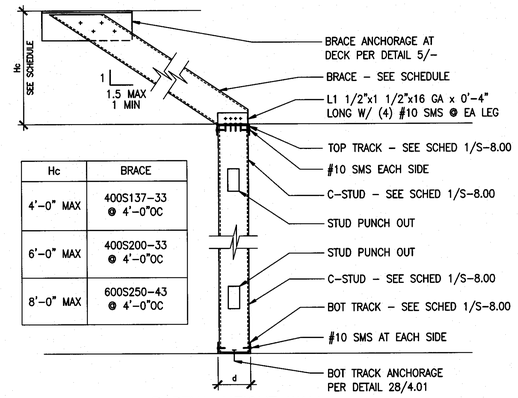

Hc	BRACE
4'-0" MAX	400S137-33 @ 4'-0"OC
6'-0" MAX	400S200-33 @ 4'-0"OC
8'-0" MAX	600S250-43 @ 4'-0"OC

PARTIAL HEIGHT WALL

TYPICAL INTERIOR WALL STUD 1 1/2"=1'-0" **1**

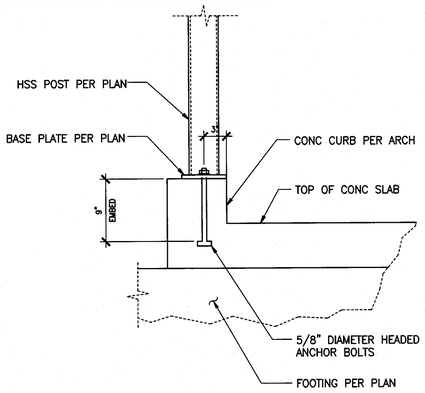

HSS SILL ANCHORAGE DETAIL 1 1/2"=1'-0" **10**

NOT USED **6**

NOT USED **2**

NOT USED **7**

NOT USED **3**

tBP
architecture
planning
interiors
management

LICENSED ARCHITECT
STATE OF CALIFORNIA

tBP/Architecture
5455 Wilshire Boulevard, Suite 1200
Los Angeles, CA 90036-4242
ph: 323. 556. 3788 fx: 323. 556. 3799

architect

kpff Consulting Engineers
301 North Lake Avenue, Suite 500
Pasadena, California 91101
(626) 578-1121 Fax (626) 578-0481

REGISTERED PROFESSIONAL ENGINEER
STRUCTURAL
STATE OF CALIFORNIA

consultant

IDENTIFICATION STAMP
DIV. OF THE STATE ARCHITECT
OFFICE OF REGULATION SERVICES
File No. 19-C11
Appl No. 03-112201
AC ___ RLS ___ SS c.e.p.
DATE 10 13 09

DSA Los Angeles Basin Regional Office
700 North Alameda Street, Suite 5-500
Los Angeles, California 90012
ph: 213/897-3995 fx: 213/897-3159/0726

agency

owner

ANTELOPE VALLEY COLLEGE HEALTH & SCIENCE BUILDING

ANTELOPE VALLEY COMMUNITY COLLEGE DISTRICT
3041 WEST AVENUE K
LANCASTER, CA 93536-5426

tBP project number : 2064.00
file name: S-802.DWG
drawn by: CV checked by: GD
date: JULY 30, 2009 - 100% CD

Rev:	date:	description:

THIS DRAWING AND THE DESIGNS, DEPICTIONS, IDEAS AND OTHER INFORMATION CONTAINED HEREIN CONSTITUTE UNPUBLISHED WORK OF tBP/ARCHITECTURE AND SHALL REMAIN THE PROPERTY OF tBP/ARCHITECTURE IN PERPETUITY. NO PART THEREOF SHALL BE REPRODUCED, DISCLOSED, DISTRIBUTED, SOLD, PUBLISHED OR OTHERWISE USED IN ANY WAY WITHOUT THE ADVANCED EXPRESS WRITTEN CONSENT OF tBP/ARCHITECTURE.

drawing title:
TYP INTERIOR METAL STUD WALL DETAILS

drawing no.:
S-8.02
drawing of

File: W:\2007\107833 - Antelope Valley College - Health and Science Building\acad\S-802.dwg
Plotted: 9/16/09 at 1:23pm By: cvallido
XREFS: V7833_Xb.dwg