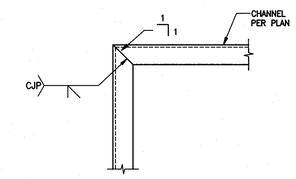

CHANNEL CONNECTION AT CORNERS 1"=1'-0" | 4

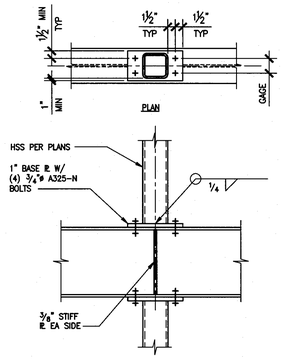

HSS COLUMN ABOVE AND BELOW BEAM 1"=1'-0" | 2

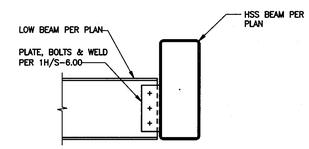

LOW BEAM TO HSS CONNECTION 1"=1'-0" | 5

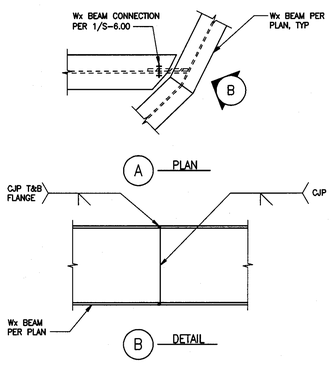

DETAIL 1"=1'-0" | 6

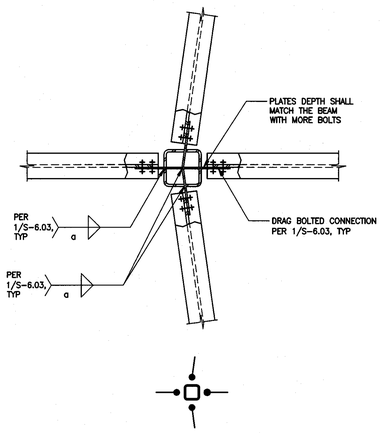

A BEAM TO HSS COLUMN PLAN

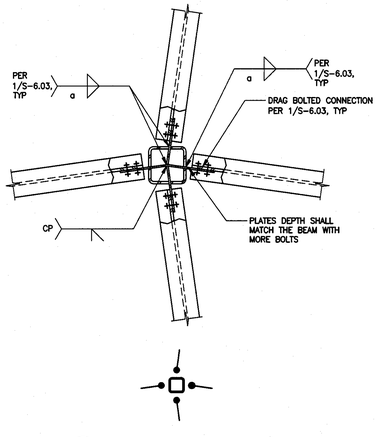

B BEAM TO HSS COLUMN PLAN

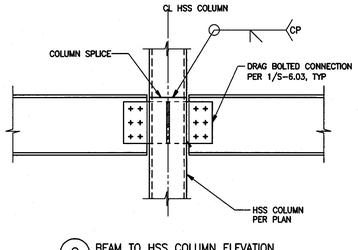

C BEAM TO HSS COLUMN ELEVATION

TYP DRAG CONNECTION DETAILS AT HSS COLUMNS 1"=1'-0" | 3

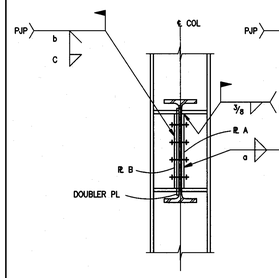

F SECTION

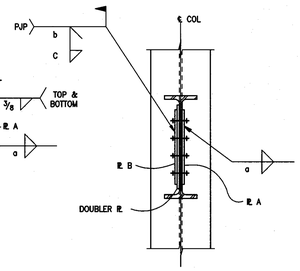

E SECTION

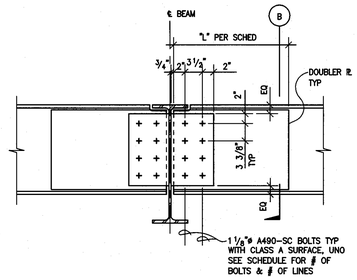

BEAM TO BEAM

A SECTION

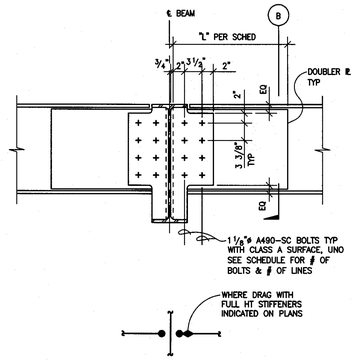

K SECTION

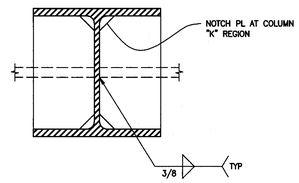

J SECTION

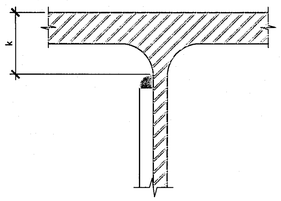

G FILLET WELD-WELDED DETAIL

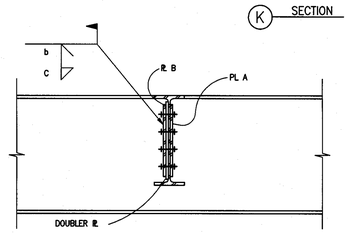

B SECTION

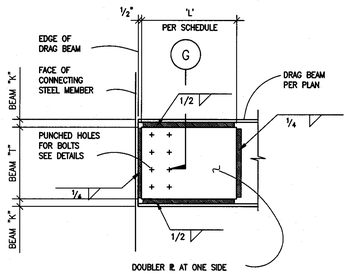

NOTE: BEAM "K" & "T" VALUES ARE FROM AISC "K" & "T" VALUES FOR REQUIRED DRAG BEAM, TYPICAL.

H DOUBLER PLATE ASSEMBLY DETAIL

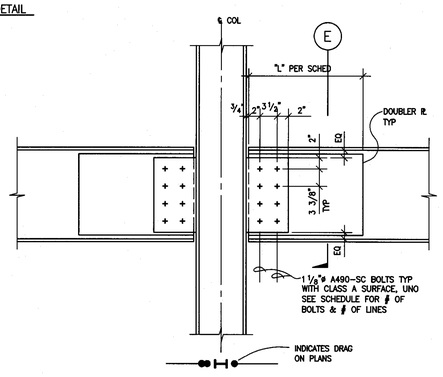

C DRAG CONNECTION AT COL FLANGE

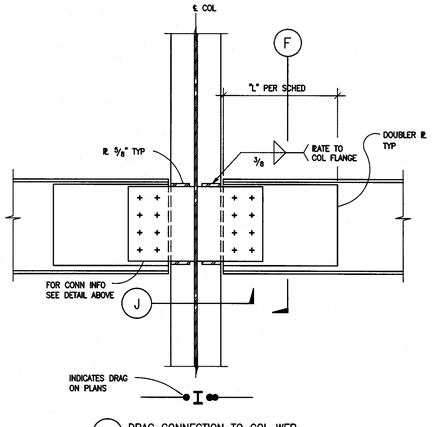

D DRAG CONNECTION TO COL WEB

SINGLE PLATED DRAG CONNECTION SCHEDULE

BEAM SIZE	NO. OF LINES	BOLTS/LINE	PLATE		WELD			DOUBLE PLATE THICKNESS (IN)	L (IN)
			A (IN)	B (IN)	a (IN)	b (IN)	c (IN)		
W14	2	3	5/8	–	1/2	–	–	–	–
W16	2	3	5/8	–	1/2	–	–	–	–
W18	2	4	5/8	–	1/2	–	–	–	–
W21	2	5	5/8	–	1/2	–	–	–	–
W24	2	5	5/8	–	1/2	–	–	–	–
W27	2	6	5/8	–	1/2	–	–	–	–
W30	2	7	5/8	–	1/2	–	–	–	–

DOUBLE PLATED DRAG CONNECTION SCHEDULE

BEAM SIZE	NO. OF LINES	BOLTS/LINE	PLATE		WELD			DOUBLE PLATE THICKNESS (IN)	L (IN)
			A (IN)	B (IN)	a (IN)	b (IN)	c (IN)		
W14	2	3	5/8	5/8	1/2	1/2	1/4	3/8	19
W16	2	3	5/8	5/8	1/2	1/2	1/4	1/2	19
W18	2	4	5/8	5/8	1/2	1/2	1/4	1/2	19
W21	2	5	5/8	5/8	1/2	1/2	1/4	1/2	19
W24	2	5	5/8	5/8	1/2	1/2	1/4	1/2	25
W27	2	6	5/8	5/8	1/2	1/2	1/4	1/2	25
W30	2	7	5/8	5/8	1/2	1/2	1/4	1/2	27

NOTES:

1. ALL PLATE MATERIAL SHALL BE A572 GR50 STEEL.

DRAG CONNECTION DETAILS 1"=1'-0" | 1

tBP
architecture planning interiors management
tBP/Architecture
5455 Wilshire Boulevard, Suite 1200
Los Angeles, CA 90036-4242
ph: 323. 556. 3788 fx: 323. 556. 3799
LICENSED ARCHITECT
STATE OF CALIFORNIA
architect

kpff Consulting Engineers
301 North Lake Avenue, Suite 500
Pasadena, California 91101
626/795-1921 Fax 626/795-9101
REGISTERED PROFESSIONAL ENGINEER
STRUCTURAL
STATE OF CALIFORNIA
consultant

IDENTIFICATION STAMP
DIV. OF THE STATE ARCHITECT
OFFICE OF REGULATION SERVICES
File No. 19-C11
Appl No. 03-112201
AC ___ RS ___ SS SEP
DATE 10 - 13 - 09

DSA Los Angeles Basin Regional Office
700 North Alameda Street, Suite 5-500
Los Angeles, California 90012
ph: 213/897-3995 fx: 213/897-3159/0726
agency

ANTELOPE VALLEY COLLEGE HEALTH & SCIENCE BUILDING

ANTELOPE VALLEY COMMUNITY COLLEGE DISTRICT
3041 WEST AVENUE K
LANCASTER, CA 93536-5426
owner

tBP project number: 2064L00
file name: S-603.DWG
drawn by: SG checked by: GD
date: JULY 30, 2009 - 100% CD

Rev:	date:	description:

THIS DRAWING AND THE DESIGNS, DEPICTIONS, IDEAS AND OTHER INFORMATION CONTAINED HEREIN CONSTITUTE UNPUBLISHED WORK OF tBP/ARCHITECTURE AND SHALL REMAIN THE PROPERTY OF tBP/ARCHITECTURE IN PERPETUITY. NO PART THEREOF SHALL BE REPRODUCED, DISCLOSED, DISTRIBUTED, SOLD, PUBLISHED OR OTHERWISE USED IN ANY WAY WITHOUT THE ADVANCED EXPRESS WRITTEN CONSENT OF tBP/ARCHITECTURE.

drawing title:
TYPICAL STEEL DETAILS

drawing no.:
S-6.03
drawing of

File: W:\2007\102933 - Antelope Valley College - Health and Science Building\cadd\S-603.dwg
Plotted: 10/13/09 at 1:20pm By: cvelez
XREFs: 1@933_fb.dwg