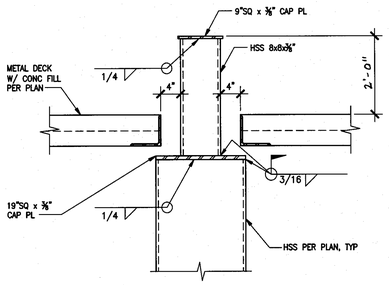

TELESCOPE POLE 1"=1'-0" **15**

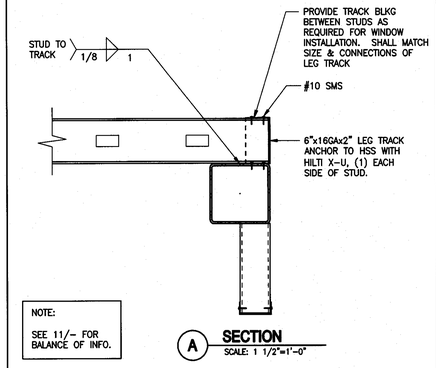

HSS SILL AT STANDING SEAM WALL 1 1/2"=1'-0" **12**

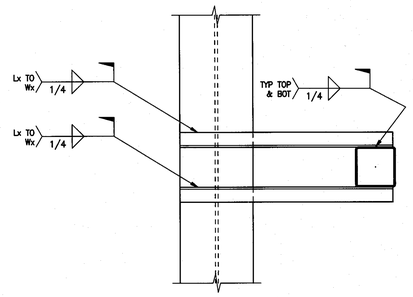

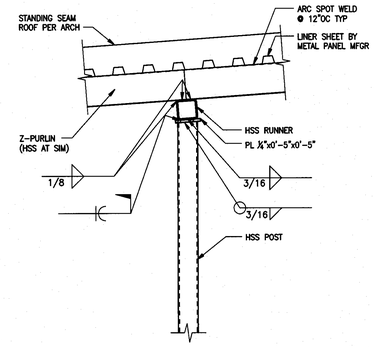

BUILT-UP ROOF POST TO BEAM 1"=1'-0" **5**

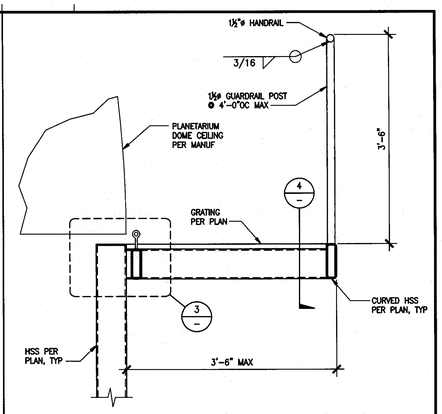

SECTION AT PLANETARIUM CATWALK 1"=1'-0" **1**

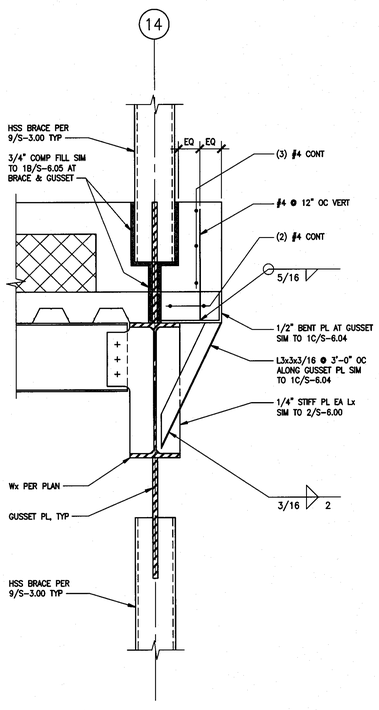

EDGE OF BUILT-UP SLAB AT GUSSET 1"=1'-0" **16**

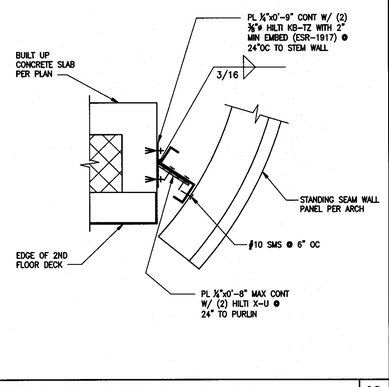

STANDING SEAM WALL AT FLOOR DECK 1"=1'-0" **13**

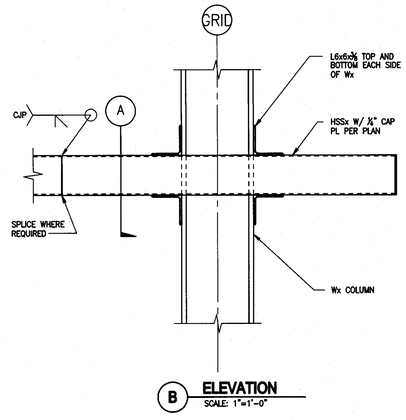

HSS WALL SPANDREL TO Wx COLUMN 1"=1'-0" **9**

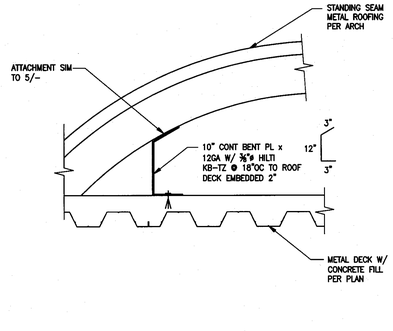

STANDING SEAM ROOF TO ROOF DECK 1"=1'-0" **6**

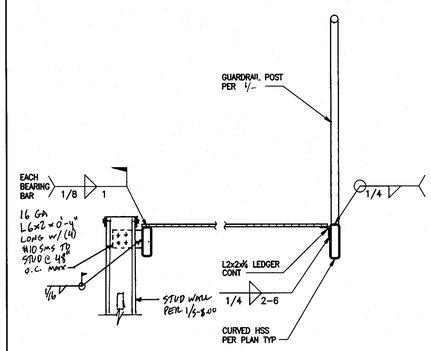

SECTION AT PLANETARIUM CATWALK 1"=1'-0" **2**

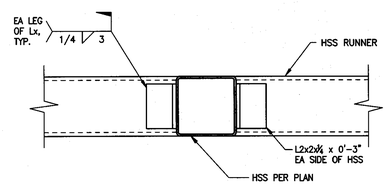

HSS TO HSS CONNECTION 3"=1'-0" **14**

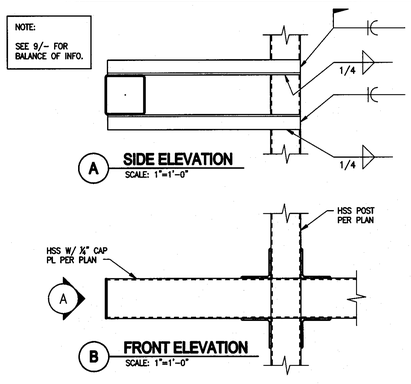

HSS WALL SPANDREL TO HSS POST 1"=1'-0" **10**

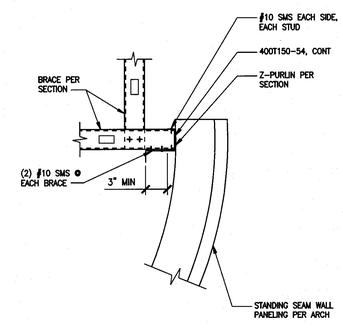

DETAIL 1"=1'-0" **7**

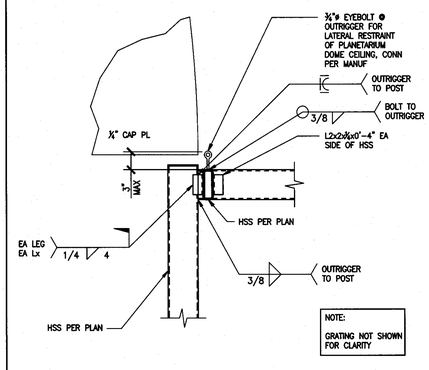

CATWALK DETAIL 1"=1'-0" **3**

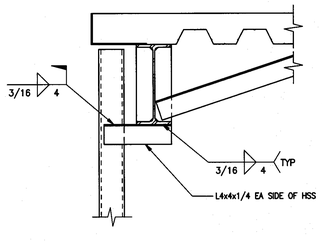

OFFSET HSS TO Wx CONNECTION - GFRC 1"=1'-0" **17**

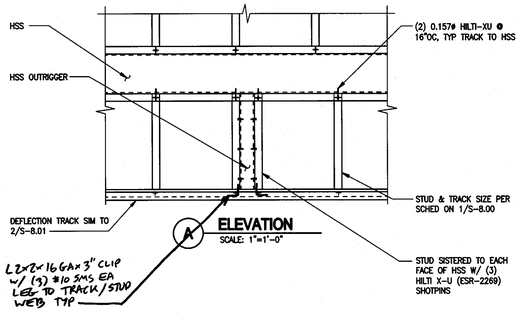

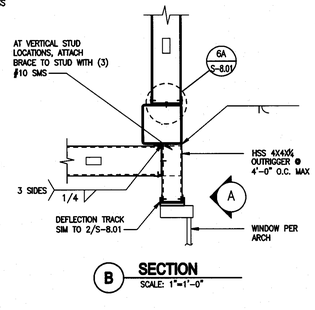

HSS HEADER AT STANDING SEAM WALL 1"=1'-0" **11**

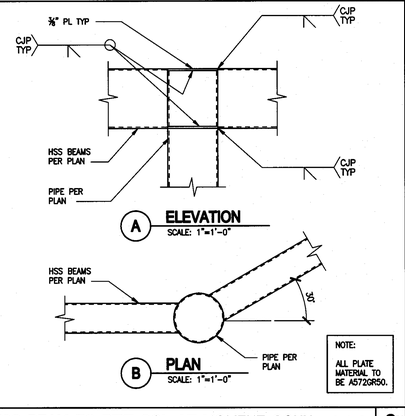

HSS BEAM TO PIPE COL AT MOMENT CONN 1"=1'-0" **8**

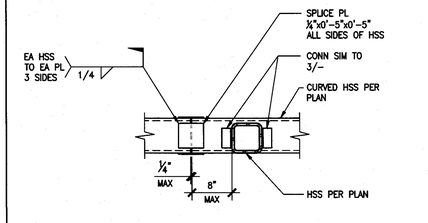

CATWALK DETAIL 1"=1'-0" **4**

tBP
architecture
planning
interiors
management
tBP/Architecture
5455 Wilshire Boulevard, Suite 1200
Los Angeles, CA 90036-4242
ph: 323. 556. 3788 fx: 323. 556. 3799
LICENSED ARCHITECT
STATE OF CALIFORNIA
architect

kpff Consulting Engineers
301 North Lake Avenue, Suite 550
Pasadena, California 91101
(626) 578-1121 Fax: (626) 578-1121
REGISTERED PROFESSIONAL ENGINEER
STRUCTURAL
STATE OF CALIFORNIA
consultant

IDENTIFICATION STAMP
DIV. OF THE STATE ARCHITECT
OFFICE OF REGULATION SERVICES
File No. 19-C11
Appl No. 03-112201
AC ____ RS ____ SS SGD
DATE 10.13.09

DSA Los Angeles Basin Regional Office
700 North Alameda Street, Suite 5-500
Los Angeles, California 90012
ph: 213/897-3995 fx: 213/897-3159/0726
agency

ANTELOPE VALLEY COLLEGE HEALTH & SCIENCE BUILDING

ANTELOPE VALLEY COMMUNITY COLLEGE DISTRICT
3041 WEST AVENUE K
LANCASTER, CA 93536-5426

owner

tBP project number : 20641.00
file name: S-612.DWG
drawn by: SG checked by: GD
date: JULY 30, 2009 - 100% CD

Rev:	date:	description:

THIS DRAWING AND THE DESIGNS, DEPICTIONS, IDEAS AND OTHER INFORMATION CONTAINED HEREIN CONSTITUTE UNPUBLISHED WORK OF tBP/ARCHITECTURE AND SHALL REMAIN THE PROPERTY OF tBP/ARCHITECTURE IN PERPETUITY. NO PART THEREOF SHALL BE REPRODUCED, DISCLOSED, DISTRIBUTED, SOLD, PUBLISHED OR OTHERWISE USED IN ANY WAY WITHOUT THE ADVANCED EXPRESS WRITTEN CONSENT OF tBP/ARCHITECTURE.

drawing title:
DETAILS

drawing no.:
S-6.12
drawing of

File: W:\2007\107833 - Antelope Valley College - Health and Science Building\plotted\S-612.dwg
Plotted: 9/16/09 at 1:22pm By: cvellido
Plotter: HP8150.pc3