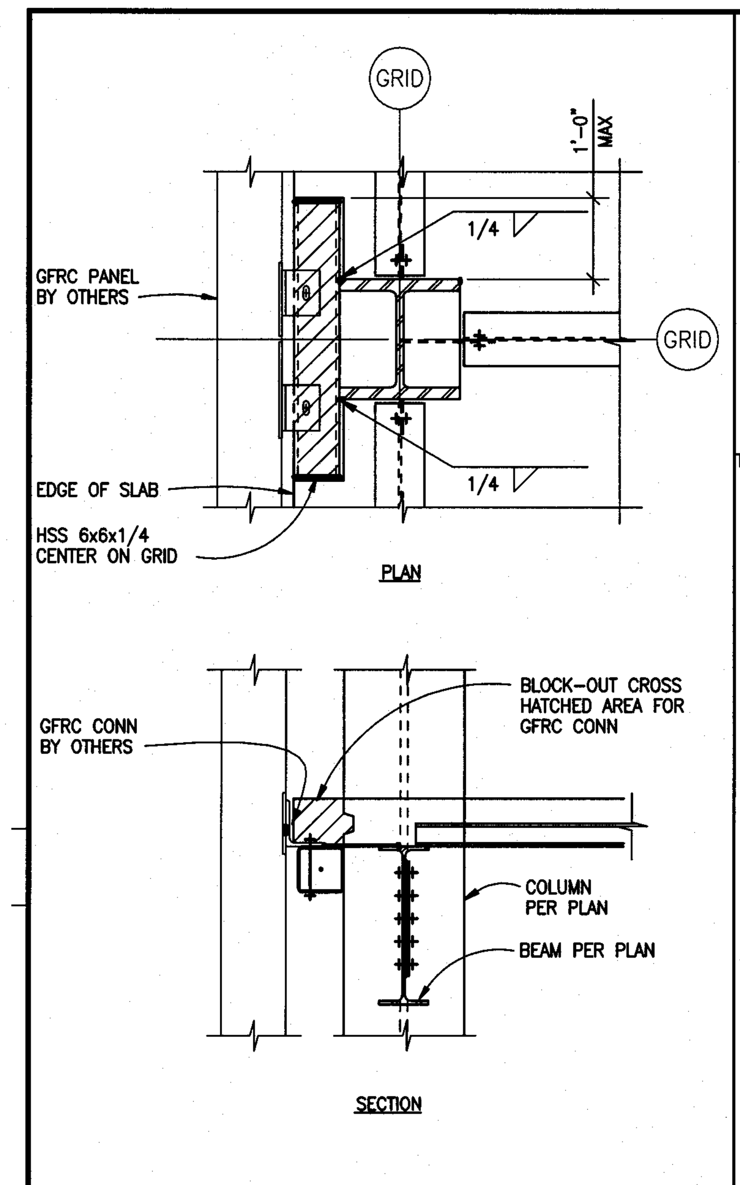

VERT LOAD BRG / OUT-OF-PLANE CONNECTION AT COLUMN "▼" 3/4"=1'-0" **10**

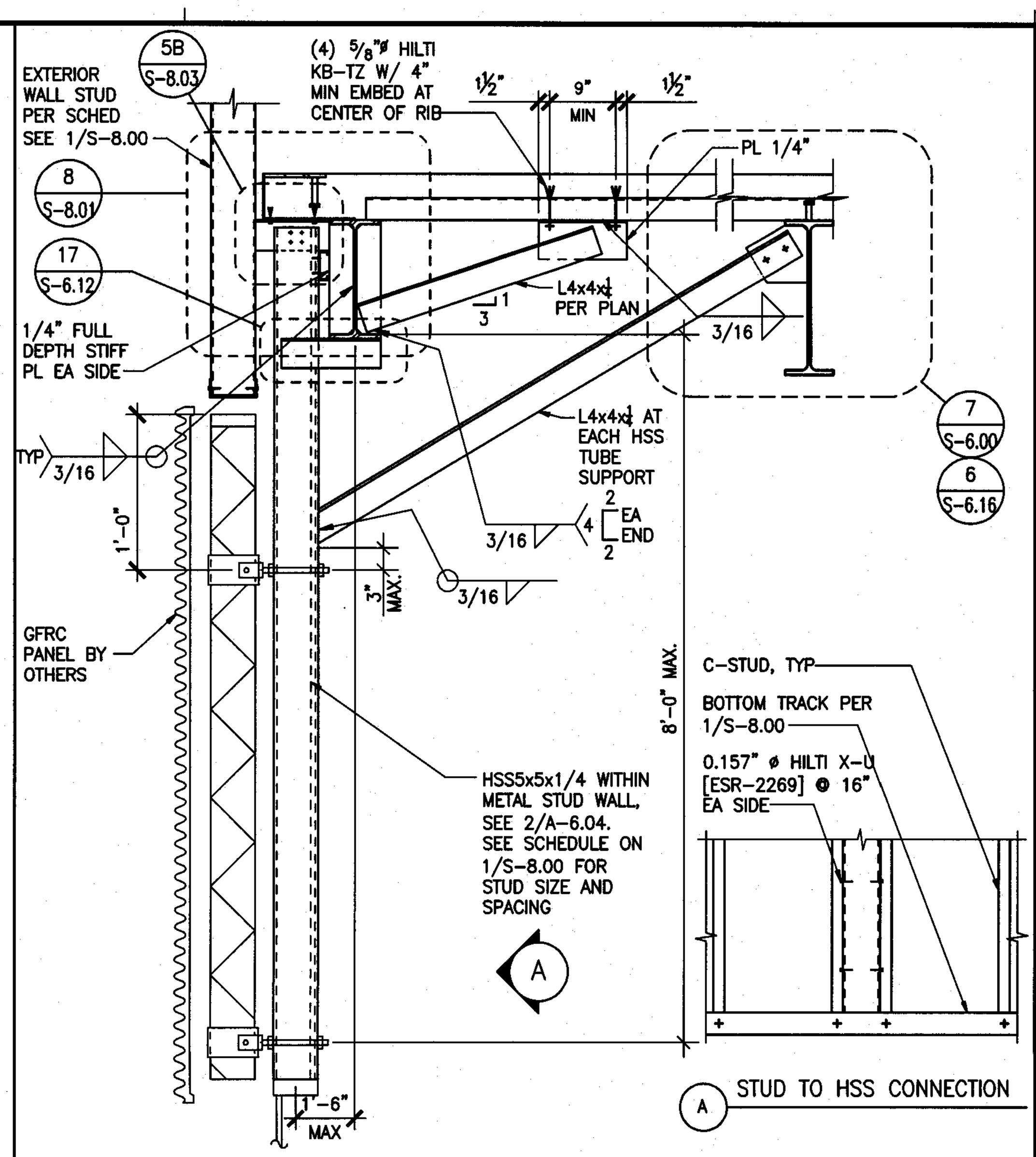

DETAIL 3/4"=1'-0" **6**

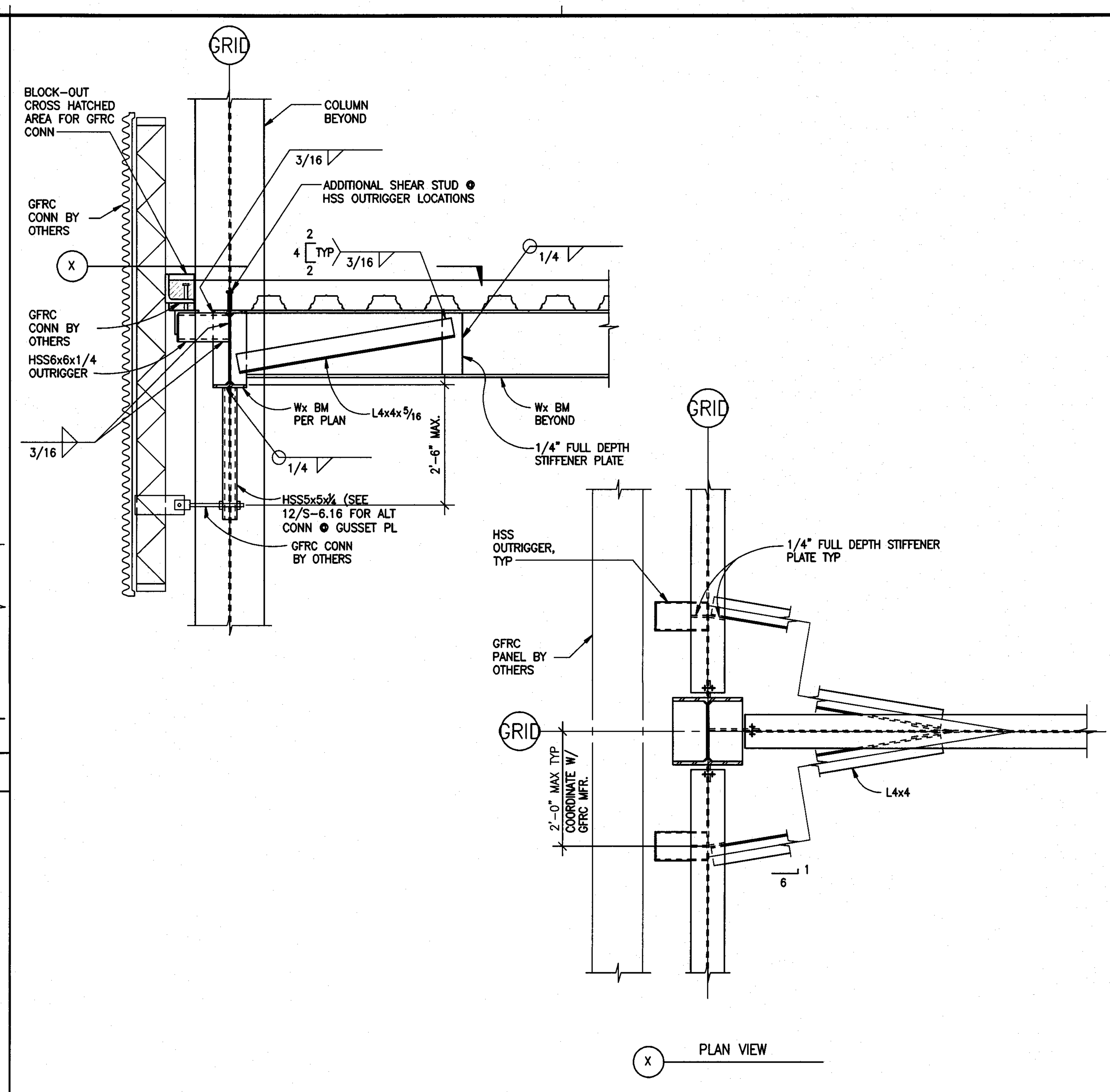

VERT LOAD BRG / OUT-OF-PLANE CONNECTION AT TOP / OUT-OF-PLANE CONNECTION AT BOTTOM- ROOF/SECOND FLOOR SIMILAR 3/4"=1'-0" **3**

GFRC WALL SYSTEM NOTES:

1. THE GFRC WALL SYSTEM WILL BE A DEFERRED APPROVAL ITEM. STRUCTURAL CALCULATIONS AND SHOP DRAWINGS SHALL BE PREPARED AND SEALED BY A CALIFORNIA LICENSED STRUCTURAL ENGINEER, AND SUBMITTED TO THE ARCHITECT FOR REVIEW AND APPROVAL, PRIOR TO SUBMISSION TO DSA. DRAWINGS, CALCULATIONS, AND FABRICATION OF GRFC PANELS SHALL BE IN ACCORDANCE WITH PCI MNL 128.
   THE GFRC WALL SYSTEM SUPPLIER SHALL HAVE FINAL RESPONSIBILITY TO OBTAIN DSA APPROVAL ON THIS PORTION OF THE WORK.
2. THE INFORMATION SHOWN ON THE CONTRACT DOCUMENTS DEFINES THE DESIGN INTENT WITH RESPECT TO INTENDED POINTS OF CONNECTION, ASSUMED DESIGN LOADS ON THE STRUCTURE, AND COORDINATION WITH OTHER ELEMENTS OF THE EXTERIOR WALL SYSTEM NOT INCLUDED IN THE SCOPE OF WORK OF THE GFRC WALL SYSTEM SUPPLIER. THE WALL SYSTEM SUPPLIER MUST CONFORM WITH THE DESIGN INTENT DEFINED ON THE CONTRACT DOCUMENTS.
3. THE LOADS SHOWN ON THE DRAWINGS REPRESENT MAXIMUM SERVICE LOAD REACTIONS WHICH THE STRUCTURE HAS BEEN DESIGNED TO WITHSTAND. THE
   GFRC WALL SYSTEM SUPPLIER SHALL UTILIZE THE PROVISIONS OF THE 2007 CALIFORNIA BUILDING CODE TO DESIGN ALL ELEMENTS OF THE SYSTEM AND TO VERIFY THAT IMPOSED REACTIONS ON THE STRUCTURE ARE LESS THAN OR EQUAL TO THE MAXIMUM LOADS SHOWN HEREIN. GENERAL, SEISMIC AND WIND LOADING CRITERIA SHALL BE AS GIVEN IN THE GENERAL NOTES SHEET S0.00 MAXIMUM ALLOWABLE DEFLECTION NORMAL TO THE PANELS DUE TO LATERAL FORCE LOADING SHALL BE SPAN/240.
4. THE SCOPE OF WORK OF THE GFRC WALL SYSTEM SUPPLIER SHALL INCLUDE THE DESIGN, DETAILING, SUPPLY AND INSTALLATION OF ALL BRACES, KICKERS AND CONNECTION HARDWARE. WHICH IS NECESSARY TO ATTACH THE WALL PANEL SYSTEM TO THE SUPPORTING STRUCTURE AND TO ALL OTHER ELEMENTS OF THE EXTERIOR WALL SYSTEM. THE DEFINITION OF THE INTENDED SCOPE OF WORK OF THE GFRC SUPPLIER IS INDICATED ON THE CONTRACT DOCUMENTS. THE GFRC SUPPLIER SHALL HAVE THE FINAL RESPONSIBILITY FOR COORDINATION WITH OTHER TRADES WITH RESPECT TO EMBED LOCATIONS, INSERTS FOR CURTAIN WALL CONNECTIONS, CONSTRUCTION SEQUENCING AND DIMENSIONAL INFORMATION. INSERTS FOR CURTAIN WALL CONNECTIONS SHALL BE SUPPLIED BY CURTAIN WALL CONTRACTOR, AND INSTALLED BY GFRC SUPPLIER. GFRC SUPPLIER SHALL VERIFY VIA CALCULATIONS THAT DESIGN CURTAIN WALL LOAD IS DEVELOPED INTO PANEL. THE CURTAIN WALL SUPPLIER SHALL BE RESPONSIBLE FOR ANY ANCHORAGE DEVICE WHICH WOULD NEED TO BE ATTACHED TO THE CURTAINWALL INSERT TO DEVELOP THE DESIGN LOAD INTO THE PANEL.
5. THE GFRC SUPPLIER IS RESPONSIBLE FOR VERIFYING A COMPLETE LOAD PATH FROM THE SLAB CONNECTIONS INTO THE SLAB DIAPHRAGMS. ANY STIFFENERS OR OTHER SPECIAL DETAILS REQUIRED AT THE PANEL CONNECTIONS TO PREVENT LOCAL OVERSTRESSING OF THE STRUCTURAL STEEL DETAILED IN THESE CONTRACT DOCUMENTS ARE BY THE SUPPLIER.
6. THE WALL SYSTEM SUPPLIER SHALL COMPLY WITH ALL SLIP JOINT LOCATIONS SHOWN ON THE CONTRACT DOCUMENTS. IN ADDITION, ALL CONNECTIONS SO NOTED SHOULD BE DESIGNED TO ACCOMODATE THE MOVEMENTS SPECIFIED.
7. REFER TO THE PROJECT SPECIFICATIONS FOR ADDITIONAL DESIGN CRITERIA FOR THE WALL SYSTEM.
8. SEE ARCHITECTURAL DRAWINGS FOR ALL PANEL DIMENSIONS AND OPENINGS, PANEL FINISHES, REVEALS AND CHAMFERS.
9. ALL MATERIALS UTILIZED IN THE WALL SYSTEM SHALL CONFORM TO THE GENERAL NOTES AND PROJECT SPECIFICATIONS OF THE CONTRACT DOCUMENTS.
10. GALVANIZE STRUCTURAL STEEL MEMBERS AND EMBEDS WHERE EXPOSED TO THE ELEMENTS AND WHERE INDICATED ON DRAWINGS IN ACCORDANCE WITH ASTM A123. TOUCH UP FIELD WELDS ON GALVANIZED ITEMS WITH PAINT CONFORMING TO TT-P-641.
11. IN DESIGNING AND DETAILING ALL CONNECTIONS WHICH ARE IN THE SCOPE OF WORK OF THE GFRC CONTRACTOR, CONTRACTOR SHALL COORDINATE SUCH DETAILING TO ACCOMODATE AND AVOID CONFLICTS WITH ALL STRUCTURAL AND NONSTRUCTURAL ELEMENTS EXPLICITLY SHOWN OR OTHERWISE INDICATED IN THE PROJECT CONSTRUCTION DOCUMENTS.
12. THE GFRC CONTRACTOR SHALL BE RESPONSIBLE FOR COORDINATION WITH THE WINDOW WASHING SYSTEM SUPPLIER FOR MAGNITUDE AND LOCATION OF ANY IMPOSED LOADING.
13. GFRC CONTRACTOR SHALL COORDINATE ALL REQUIRED ELECTRICAL, PLUMBING AND MECH'L OPENINGS IN PANELS.
14. THE CONTRACTOR SHALL COORDINATE THE GFRC ANCHOR INSTALLATION WITH THE CONCRETE FLOOR POURS.

GFRC PANEL WALL SYSTEM NOTES NTS **1**

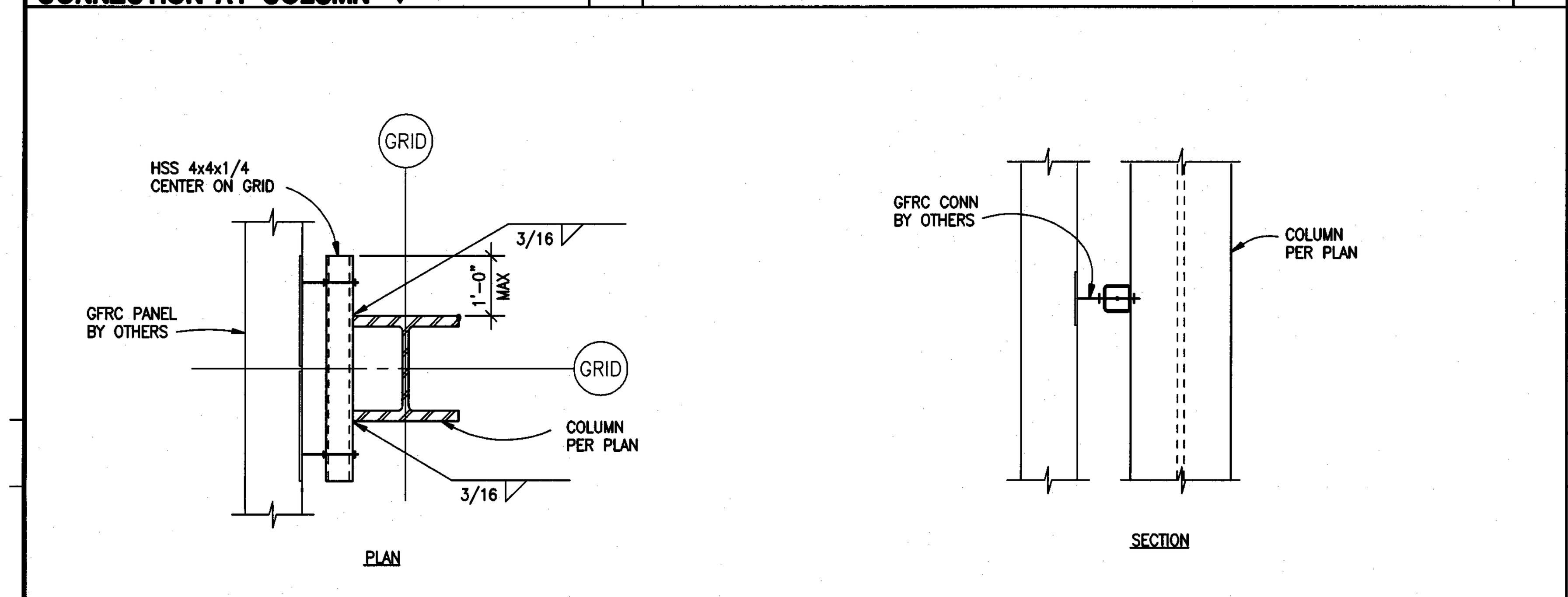

OUT-OF-PLANE CONNECTION AT COLUMN "●" 3/4"=1'-0" **9**

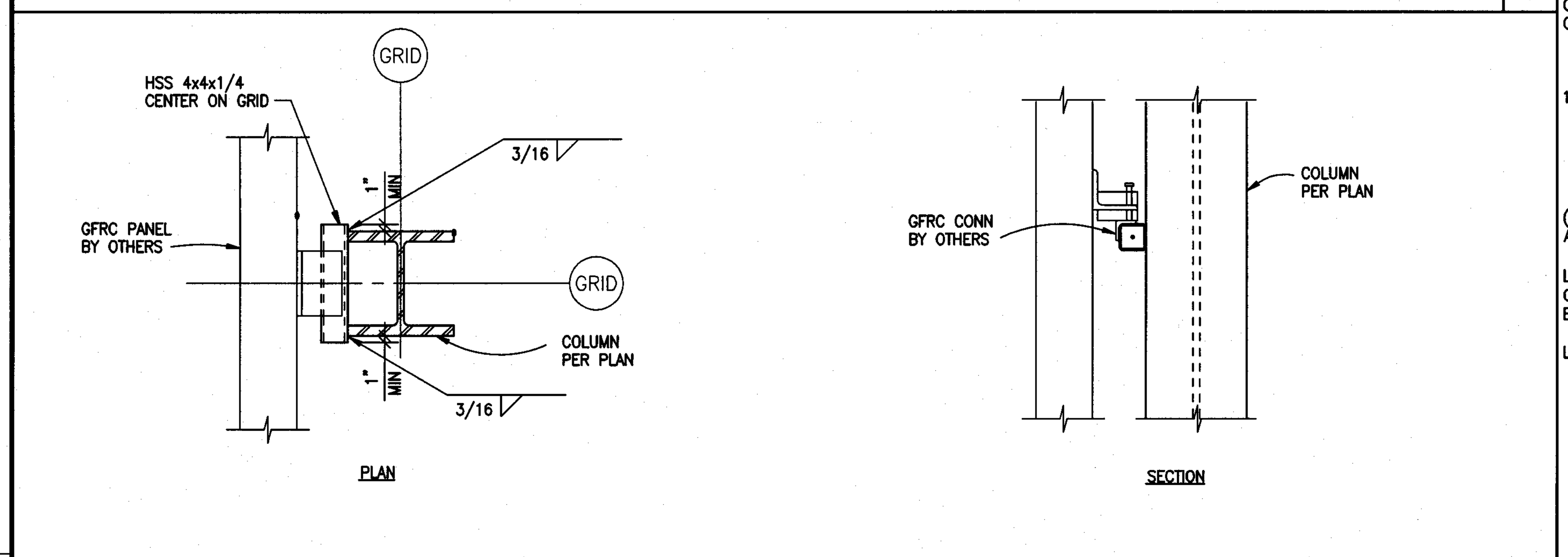

VERT LOAD BRG / OUT OF PLANE CONNECTION AT COLUMN "▲" 3/4"=1'-0" **11**

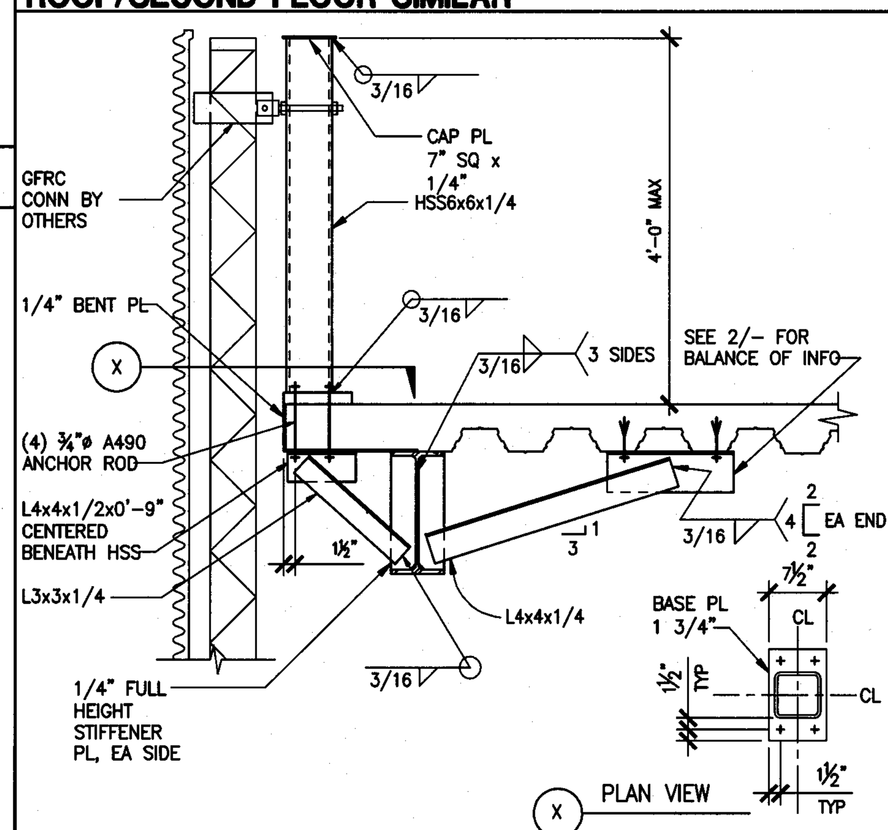

DETAIL 3/4"=1'-0" **7**

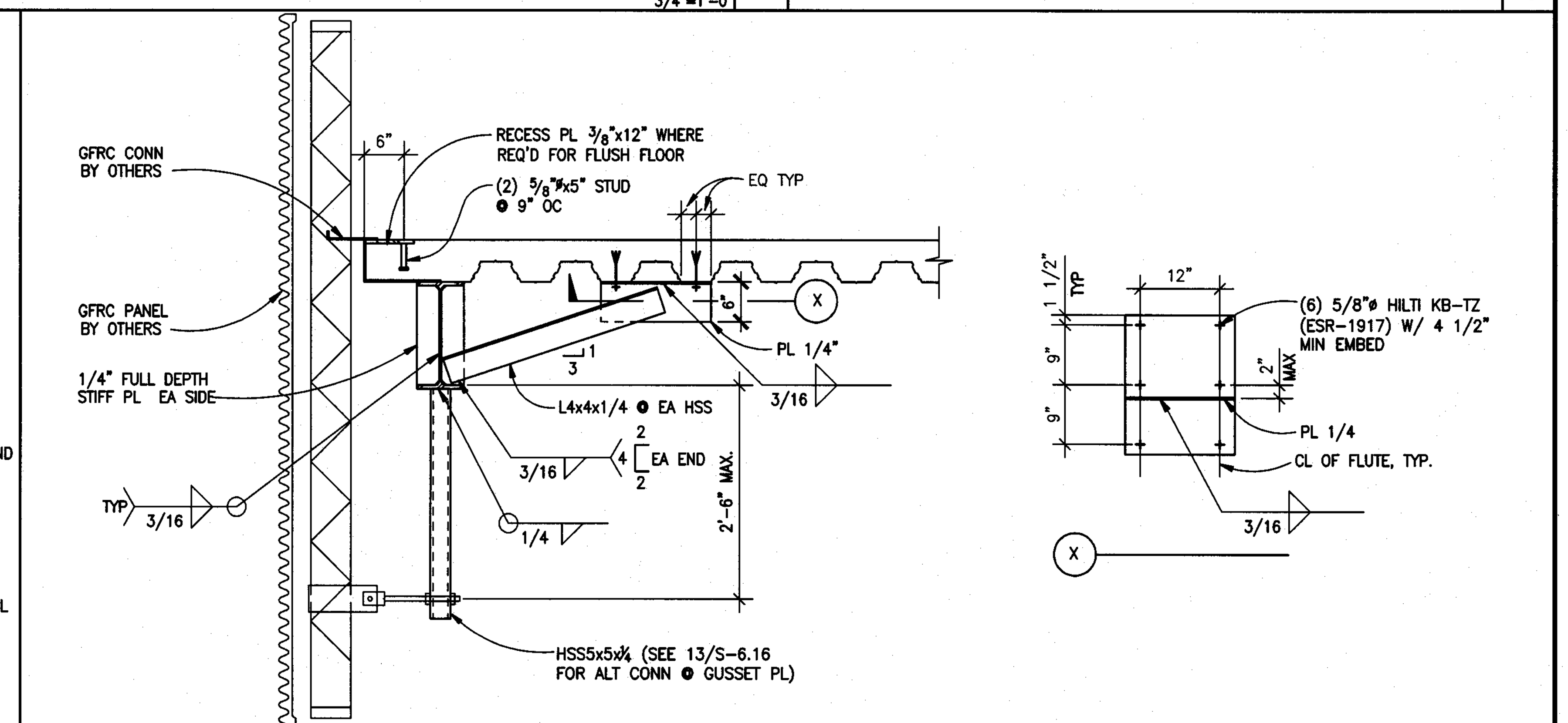

IN-PLANE/OUT OF PLANE CONNECTION AT TOP / OUT-OF-PLANE CONNECTION AT BOTTOM- ROOF 3/4"=1'-0" **2**

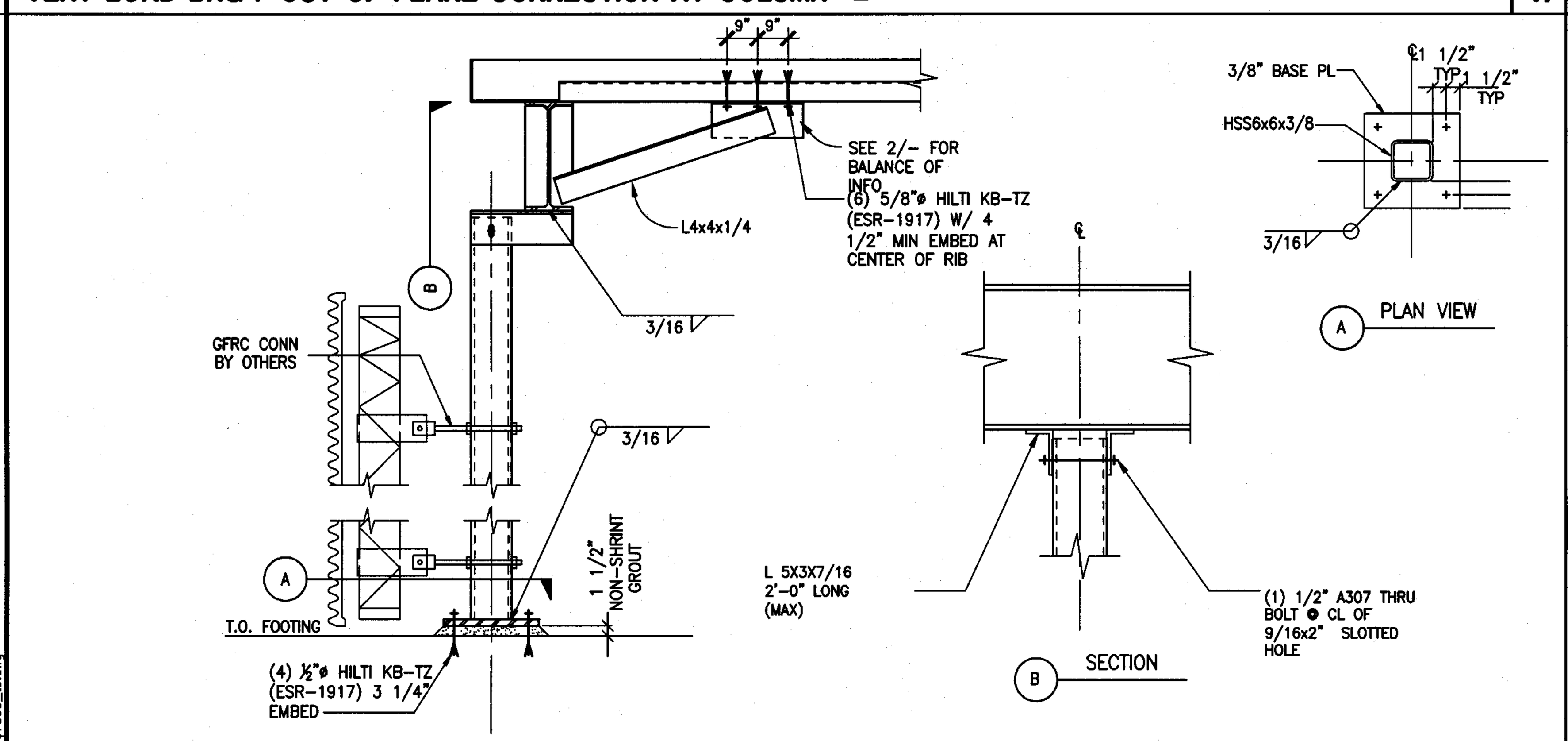

DETAIL 3/4"=1'-0" **12**

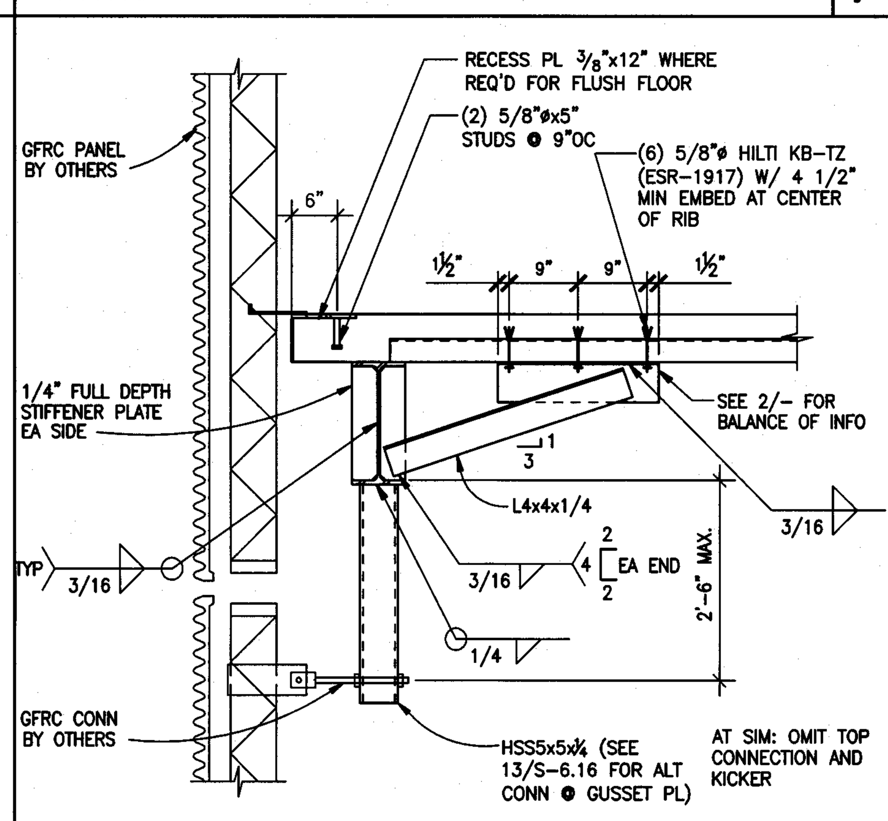

IN-PLANE/OUT OF PLANE CONNECTION AT TOP OUT-OF-PLANE CONNECTION AT BOTTOM- 2ND FLOOR NTS **8**

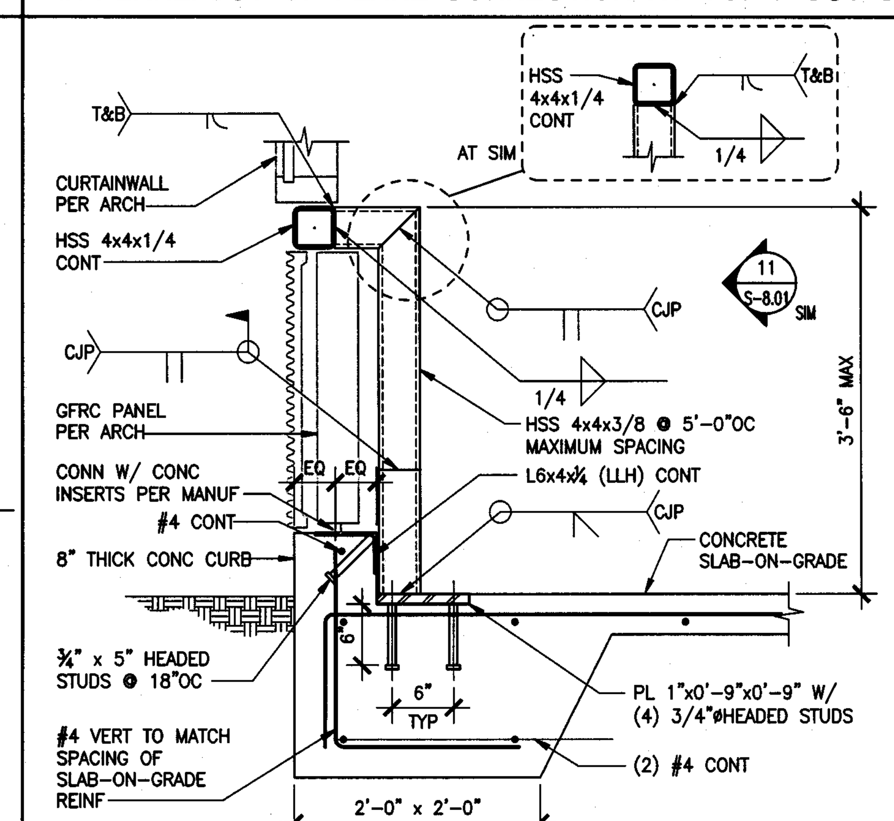

SILL FRAMING AT GFRC / CURTAINWALL 1"=1'-0" **5**

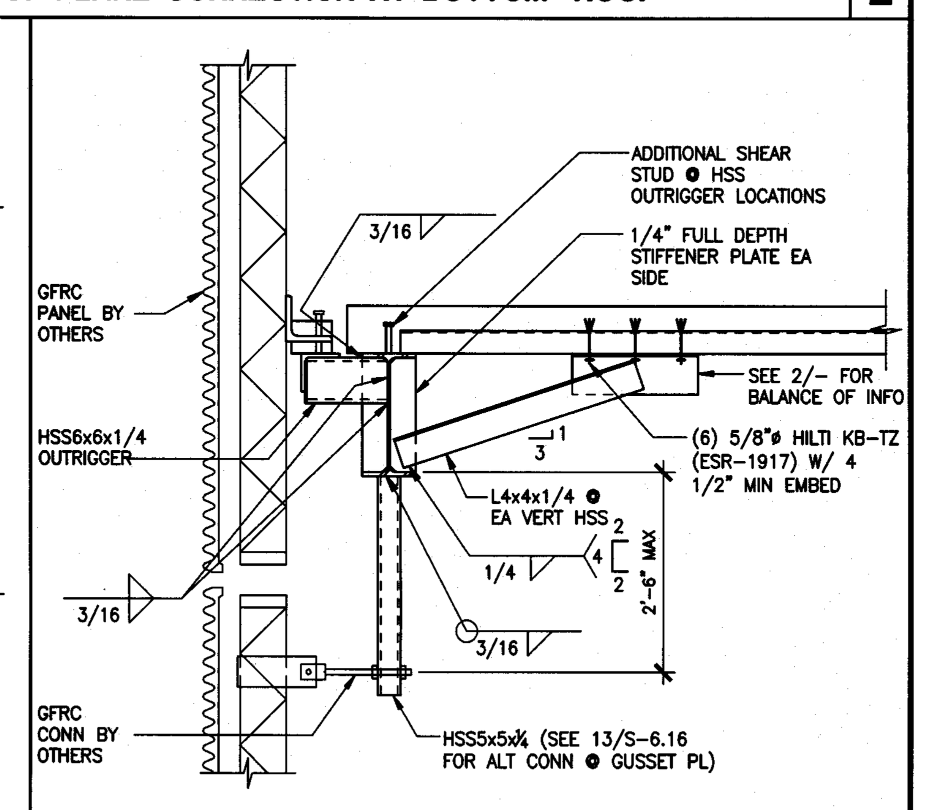

NTS

VERT LOAD BRG / OUT-OF-PLANE CONN AT TOP OUT-OF-PLANE CONN AT BOTTOM- 2ND FLOOR/ROOF SIM **4**

tBP architecture planning interiors management
tBP/Architecture
5455 Wilshire Boulevard, Suite 1200
Los Angeles, CA 90036-4242
ph: 323. 556. 3788 fx: 323. 556. 3799
architect

kpff Consulting Engineers
301 North Lake Avenue, Suite 650
Pasadena, California 91101
(626) 578-1121 Fax (626) 578-0121

REGISTERED PROFESSIONAL ENGINEER ALDRIN J. PRUE No. S4399 Exp. 12/31/09 STRUCTURAL STATE OF CALIFORNIA
consultant

IDENTIFICATION STAMP
DIV. OF THE STATE ARCHITECT
OFFICE OF REGULATION SERVICES
File No. 19-C11
Appl No. 03-112201
AC ___ FLS ___ SS SGA
DATE 10.13-09

DSA Los Angeles Basin Regional Office
700 North Alameda Street, Suite 5-500
Los Angeles, California 90012
ph: 213/897-3995 fx: 213/897-3159/0726
agency

ANTELOPE VALLEY COLLEGE
HEALTH & SCIENCE BUILDING
ANTELOPE VALLEY COMMUNITY COLLEGE DISTRICT
3041 WEST AVENUE K
LANCASTER, CA 93536-5426
owner

tBP project number : 20641.00
file name: S-614.DWG
drawn by: SG checked by: GD
date: JULY 30, 2009 - 100% CD
Rev: date: description:

THIS DRAWING AND THE DESIGNS, DEPICTIONS, IDEAS AND OTHER INFORMATION CONTAINED HEREIN CONSTITUTE UNPUBLISHED WORK OF tBP/ARCHITECTURE AND SHALL REMAIN THE PROPERTY OF tBP/ARCHITECTURE IN PERPETUITY. NO PART THEREOF SHALL BE REPRODUCED, DISCLOSED, DISTRIBUTED, SOLD, PUBLISHED OR OTHERWISE USED IN ANY WAY WITHOUT THE ADVANCED EXPRESS WRITTEN CONSENT OF tBP/ARCHITECTURE.

drawing title:
GFRC PANEL SUPPORT DETAILS

drawing no.:
S-6.14
drawing of

File: W:\2007\107833 - Antelope Valley College - Health and Science Building\sdraft\S-614.dwg
Plotted: 9/16/09 at 1:22pm By: cvallido
XREFs: 107833_tb.dwg