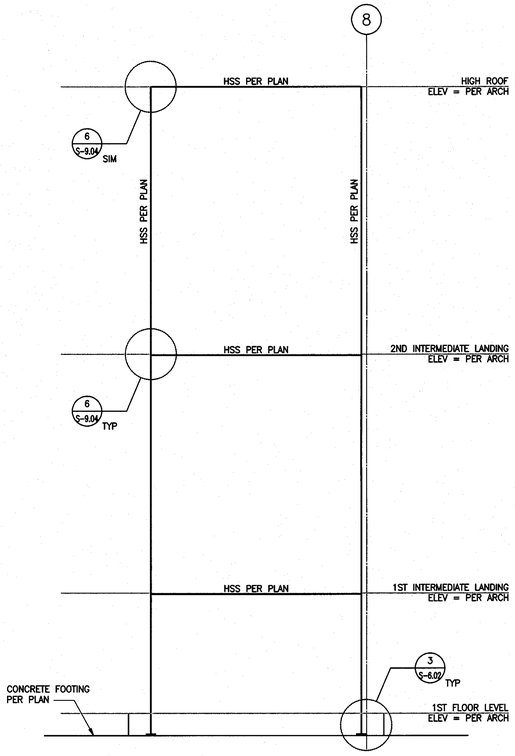

STAIR ELEVATION AT STAIR #1 NTS **11**

NOT USED

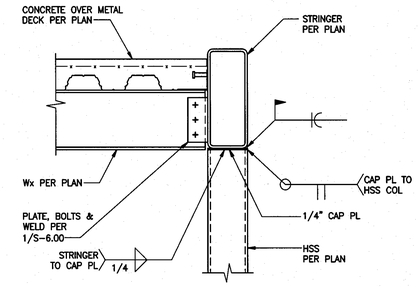

Wx BEAM TO HSS STRINGER 1"=1'-0" **3**

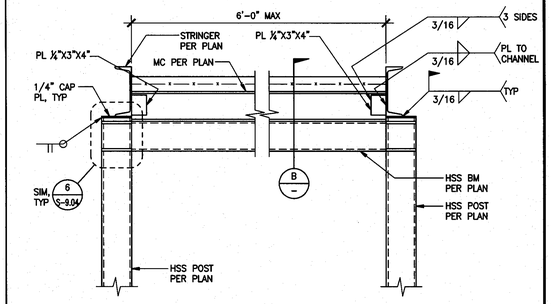

A SECTION

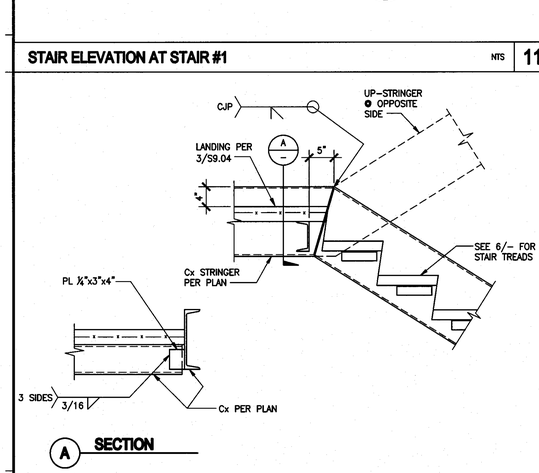

A SECTION

OUTSIDE STRINGER AT LANDING (STAIR #1) 1"=1'-0" **12**

NOT USED

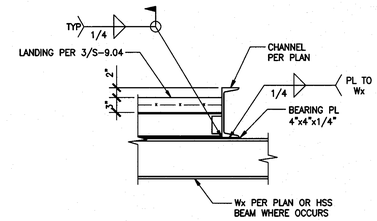

DETAIL 1"=1'-0" **4**

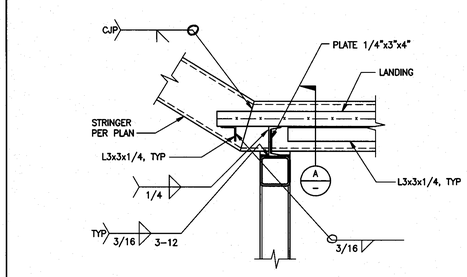

B SECTION

STAIR STRINGER AT FRAME CONNECTION 1"=1'-0" **1**

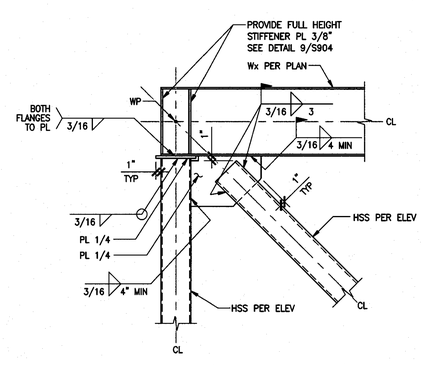

DETAIL 1"=1'-0" **9**

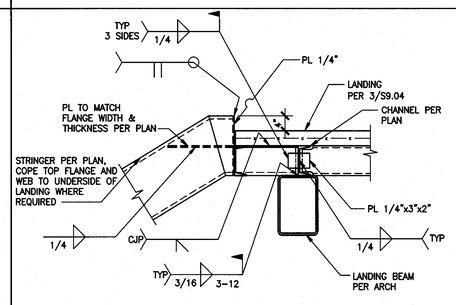

STAIR #1 INSIDE STRINGER @ LANDING 1"=1'-0" **5**

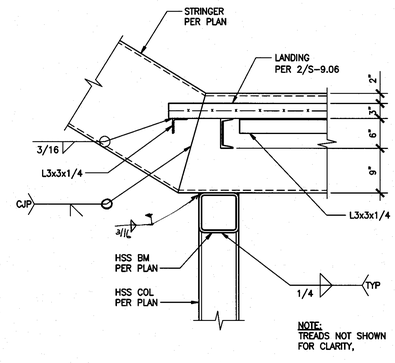

A SECTION

STAIR #4 STRINGER TO HSS POST 1"=1'-0" **2**

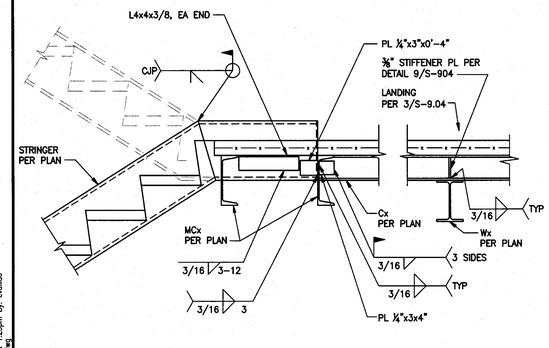

INTERMEDIATE LANDING DETAIL (STAIR #3) 1"=1'-0" **13**

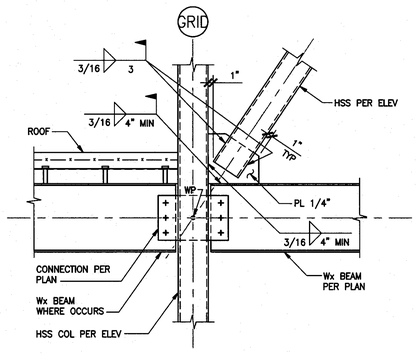

Wx BEAM TO HSS POST @ BRACE FRAME 1"=1'-0" **10**

NOT USED

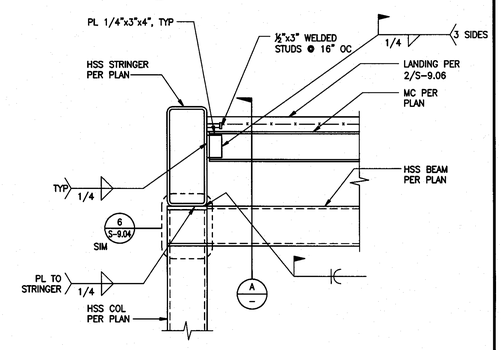

A SECTION

tBP
architecture
planning
interiors
management
tBP/Architecture
5455 Wilshire Boulevard, Suite 1200
Los Angeles, CA 90036-4242
ph: 323. 556. 3788 fx: 323. 556. 3799
LICENSED ARCHITECT
STATE OF CALIFORNIA
architect

kpff Consulting Engineers
301 North Lake Avenue, Suite 600
Pasadena, California 91101
(626) 578-1121 Fax (626) 578-0481
REGISTERED PROFESSIONAL ENGINEER
STRUCTURAL
STATE OF CALIFORNIA
consultant

IDENTIFICATION STAMP
DIV. OF THE STATE ARCHITECT
OFFICE OF REGULATION SERVICES
File No. 19-C11
Appl No. 03-112201
AC RS S S.R.A.
DATE 10 - 13 - 09

DSA Los Angeles Basin Regional Office
700 North Alameda Street, Suite 5-500
Los Angeles, California 90012
ph: 213/897-3995 fx: 213/897-3159/0726
agency

ANTELOPE VALLEY COLLEGE HEALTH & SCIENCE BUILDING

ANTELOPE VALLEY COMMUNITY COLLEGE DISTRICT
3041 WEST AVENUE K
LANCASTER, CA 93536-5426

owner

tBP project number : 2064.00
file name: S-905.DWG
drawn by: SG checked by: GD
date: JULY 30, 2009 - 100% CD

Rev:	date:	description:

THIS DRAWING AND THE DESIGNS, DEPICTIONS, IDEAS AND OTHER INFORMATION CONTAINED HEREIN CONSTITUTE UNPUBLISHED WORK OF tBP/ARCHITECTURE AND SHALL REMAIN THE PROPERTY OF tBP/ARCHITECTURE IN PERPETUITY. NO PART THEREOF SHALL BE REPRODUCED, DISCLOSED, DISTRIBUTED, SOLD, PUBLISHED OR OTHERWISE USED IN ANY WAY WITHOUT THE ADVANCED EXPRESS WRITTEN CONSENT OF tBP/ARCHITECTURE.

drawing title:
STAIR DETAILS

drawing no.:
S-9.05
drawing of

File: W:\2007\107833 - Antelope Valley College - Health and Science Building\sdraft\S-905.dwg
Plotted: 10/13/09 at 1:23pm By: cvallejo
XREFs: 107833_Ib.dwg