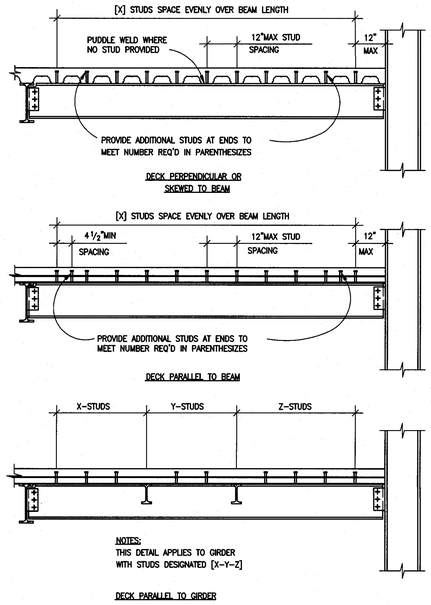

NOTES:

1. THE MINIMUM NUMBER OF STUDS REQUIRED IS SHOWN AS [X] ON FRAMING PLANS OR 12"O.C. MAXIMUM SPACING IF NOT CALLED OUT ON PLANS.
2. IF TWO STUDS ARE REQUIRED IN ONE FLUTE THE TRANSVERSE SPACING SHALL BE 3" MINIMUM. SEE DET 8/–.
3. UNLESS NOTED [0] ALL BEAMS AND GIRDERS THAT SUPPORT STRUCTURAL CONCRETE SHALL HAVE 3/4"#X5" LONG HEADED SHEAR STUDS @ 12" O.C. (MAX.)

COMPOSITE BEAM STUD SPACING 1"=1'-0" 14

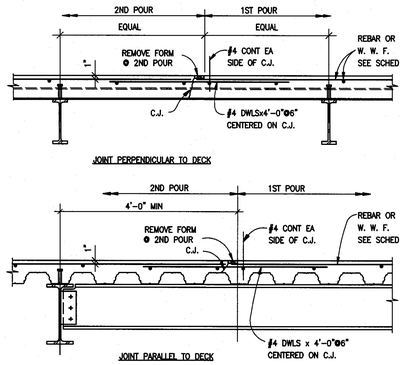

CONSTRUCTION JOINT FOR SLAB 1"=1'-0" 9

MARK	STEEL DECK TYPE	GAGE	TOTAL THICKNESS (t)	CONCRETE TYPE	REINFORCEMENT	STEEL DECK WELDING PATTERN				MAXIMUM UNSHORED SPAN		
						END [3]	INTERMEDIATE [3]	SEAM	MARGINAL	SINGLE SPAN	DOUBLE SPAN	TRIPLE SPAN
D1	VERCO W3 FORMLOK	20	6 1/4"	f'c = 3000 psi LIGHT WEIGHT	#4 @ 18" OC, EW	3/4"@ PUDDLE [4] WELD @ 12"OC	3/4"@ PUDDLE [4] WELD @ 12"OC	BUTTON PUNCH @ 24" OC	3/4"@ PUDDLE WELD @ 12"OC	9'-6"	10'-6"	11'-6"
D2	VERCO HSB-36	18	1 1/2"	–	–	3/4"@ PUDDLE [4] WELD @ 12"OC	3/4"@ PUDDLE [4] WELD @ 12"OC	TSW @ 24"OC	3/4"@ PUDDLE WELD @ 12"OC	–	–	–
D3	VERCO W3 FORMLOK	18	6 1/4"	f'c = 3000 psi LIGHT WEIGHT	#4 @ 18" OC, EW	3/4"@ PUDDLE [4] WELD @ 12"OC	3/4"@ PUDDLE [4] WELD @ 12"OC	BUTTON PUNCH @ 24" OC	3/4"@ PUDDLE WELD @ 12"OC	9'-6"	10'-6"	11'-6"
D4	VERCO W2 FORMLOK	18	5"	LITHOCRITE PER ARCH	4x4–W2.0–W2.0 WWF	3/4"@ PUDDLE [4] WELD @ 12"OC	3/4"@ PUDDLE [4] WELD @ 12"OC	BUTTON PUNCH @ 24" OC	3/4"@ PUDDLE WELD @ 12"OC	6'-0"	6'-6"	7'-6"

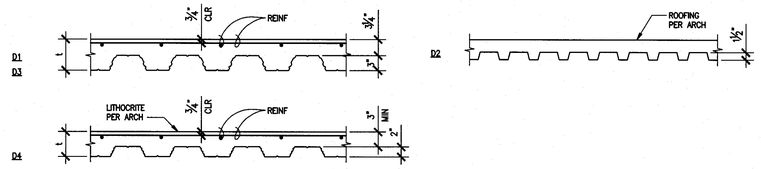

NOTES:

1. SEE GENERAL NOTES ON S-0.00 FOR STEEL DECK PROPERTIES.
2. SEE DET 16/– FOR DECK BEARING.
3. NO PUDDLE WELDS REQUIRED WHERE STUDS OCCUR.
4. PROVIDE MIN OF (4) WELDS PER SHEET.
5. SEE ARCH FOR FINISH REQUIREMENTS.
6. WHERE SPANS EXCEED MAX. UNSHORED SPANS FROM THE TABLE, THE CONTRACTOR MAY CHOOSE TO SHORE THE DECK OR USE AN APPROVED HEAVIER GAGE DECK.

STEEL DECK SCHEDULE 1"=1'-0" 1

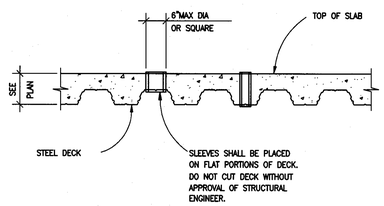

TYPICAL DECK SLEEVE 1"=1'-0" 10

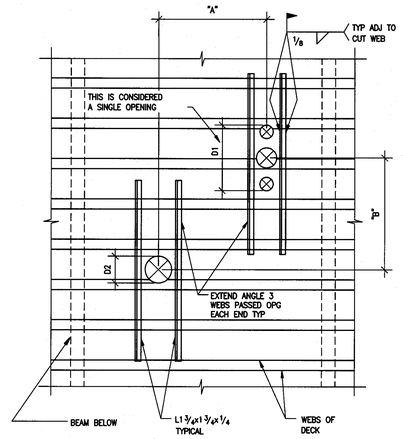

NOTES:

1. HOLES LESS THAN 6" IN DIAMETER AND CUTTING NO MORE THAN 1 WEB NEED NO REINFORCING.
2. DO NOT CUT MORE THAN 2 ADJACENT WEBS.
3. ANGLES SHALL BE PLACED ON TOP OF DECK. ALTERNATELY THEY CAN BE PLACED ON BOTTOM OF DECK.
4. IF DIMENSIONS "A" AND "B" ARE LESS THAN 4D1, 4D2, OR 32" WHICHEVER IS LARGER, THE OPENING GROUP SHALL BE CONSIDERED AS A SINGLE HOLE, AND MUST BE REINFORCED AS REQUIRED FOR THE LARGER OPENING.
5. IF DIMENSION "A" IS GREATER THAN 4D1, 4D2, OR 32" WHICHEVER IS LARGER, THEN THERE IS NO RESTRICTION ON DIMENSION "B".
6. IF DIMENSION "B" IS GREATER THAN 4D1, 4D2, OR 32" WHICHEVER IS LARGER, THEN THERE IS NO RESTRICTION ON DIMENSION "A".
7. WHEN MAXIMUM DIMENSION OF AN OPENING OR OPENING GROUP EXCEEDS 12" USE DET 2/–

CONCRETE OVER METAL DECK SLEEVE DETAIL 1"=1'-0" 5

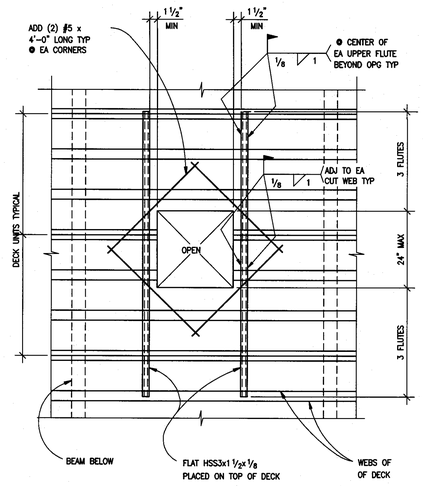

NOTE:

1. IF THE OPENING OR GROUP OF OPENING OCCURS IN ONE DECKING UNIT, THE OPENING OR OPENING GROUP MAY BE CUT PRIOR TO POURING OF CONCRETE.
2. IF, AS SHOWN IN THE DETAIL ABOVE, THE OPENING OR OPENING GROUP CUTS THROUGH TWO DECKING UNITS, THE DECKING SHALL NOT BE CUT UNTIL CONCRETE HAS BEEN PLACED AND CURED FOR A MIN OF 7 DAYS. AT THE TIME OF POURING, SUITABLE SLEEVES OR BULKHEADS SHALL BE PLACED AROUND THE OPENING.
3. ADD REBAR AT CORNERS OF OPENING.
4. WHEN THE MAXIMUM DIMENSION OF AN OPENING OR OPENING GROUP EXCEEDS 24", SEE PLANS FOR OPENING FRAMING.

CONCRETE OVER METAL DECK BLOCK OUT DETAIL 1"=1'-0" 3

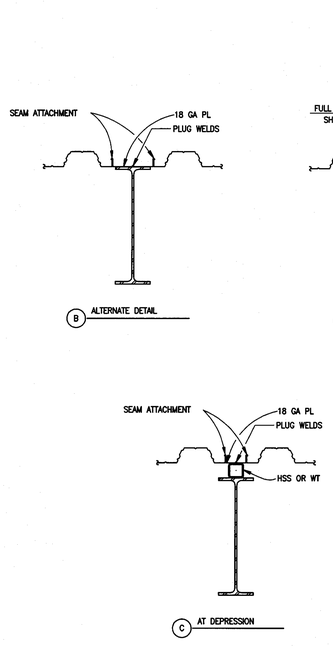

STEEL DECK ALIGNMENT/BEARING 1"=1'-0" 16

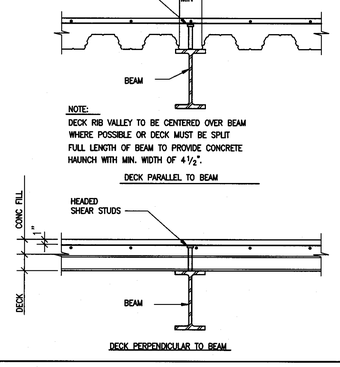

COMPOSITE BEAM TO COMPOSITE SLAB 1"=1'-0" 11

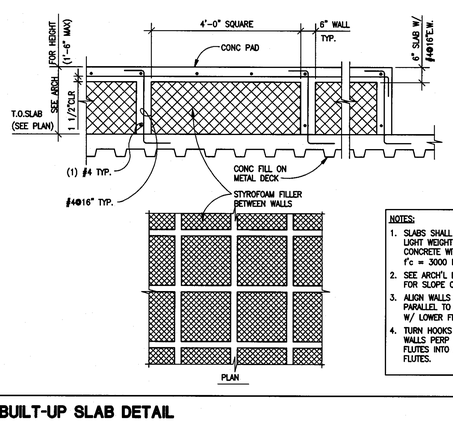

NOTES:

1. SLABS SHALL BE LIGHT WEIGHT CONCRETE WITH f'c = 3000 PSI.
2. SEE ARCH'L DWGS FOR SLOPE OF PAD.
3. ALIGN WALLS PARALLEL TO FLUTES W/ LOWER FLUTE.
4. TURN HOOKS AT WALLS PERP TO FLUTES INTO LOWER FLUTES.

BUILT-UP SLAB DETAIL 1"=1'-0" 12

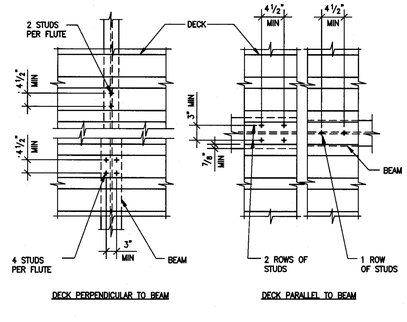

PLAN - STUD SPACING 1"=1'-0" 8

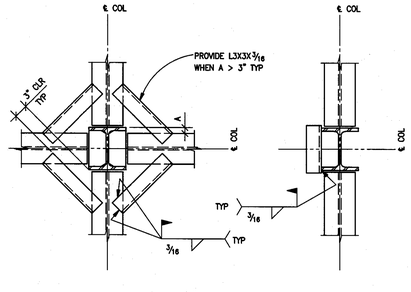

NOTE:

DECK SUPPLIER SHALL PROVIDE REQUIRED DECK SUPPORTS AND CLOSURES AROUND COLUMN AS REQUIRED.

METAL DECK SUPPORT AT COLUMN 1"=1'-0" 4

tBP
architecture
planning
interiors
management

tBP/Architecture
5455 Wilshire Boulevard, Suite 1200
Los Angeles, CA 90036-4242
ph: 323. 556. 3788 fx: 323. 556. 3799

LICENSED ARCHITECT
STATE OF CALIFORNIA

architect

kpff Consulting Engineers
301 North Lake Avenue, Suite 550
Pasadena, California 91101
626/85 579-1921 Fax 626/85 579-0921

REGISTERED PROFESSIONAL ENGINEER
ALAN R. POLIVKA
No. S4399
Exp. 12/31/09
STRUCTURAL
STATE OF CALIFORNIA

consultant

IDENTIFICATION STAMP
DIV. OF THE STATE ARCHITECT
OFFICE OF REGULATION SERVICES
File No. 19-C11
Appl No. 03-112201
AC ___ RS ___ SS SQ
DATE 10.13.08

DSA Los Angeles Basin Regional Office
700 North Alameda Street, Suite 5-500
Los Angeles, California 90012
ph: 213/897-3995 fx: 213/897-3159/0726

agency

owner

ANTELOPE VALLEY COLLEGE HEALTH & SCIENCE BUILDING

ANTELOPE VALLEY COMMUNITY COLLEGE DISTRICT
3041 WEST AVENUE K
LANCASTER, CA 93536-5426

tBP project number : 2064L00
file name: S-502.DWG
drawn by: SG checked by: GD
date: JULY 30, 2009 - 100% CD

Rev:	date:	description:

THIS DRAWING AND THE DESIGNS, DEPICTIONS, IDEAS AND OTHER INFORMATION CONTAINED HEREIN CONSTITUTE UNPUBLISHED WORK OF tBP/ARCHITECTURE AND SHALL REMAIN THE PROPERTY OF tBP/ARCHITECTURE IN PERPETUITY. NO PART THEREOF SHALL BE REPRODUCED, DISCLOSED, DISTRIBUTED, SOLD, PUBLISHED OR OTHERWISE USED IN ANY WAY WITHOUT THE ADVANCED EXPRESS WRITTEN CONSENT OF tBP/ARCHITECTURE.

drawing title:
TYPICAL STEEL DETAILS

drawing no.:
S-6.01
drawing of

File: W:\2007\107833 - Antelope Valley College - Health and Science Building\sdraft\S-601.dwg
Plotted: 10/13/09 at 1:21pm By: cvallido
Revision: 19 Plot Scale: 1:1