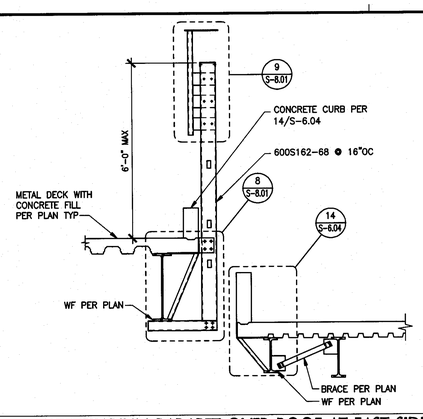

PLANETARIUM PARAPET OVER ROOF AT EAST SIDE 3
SCALE: 1/2" = 1'-0"

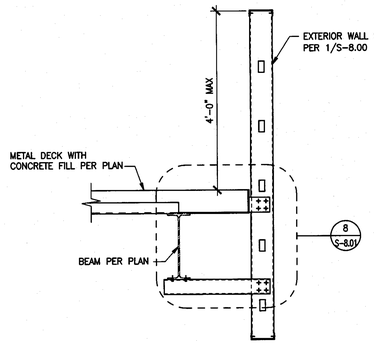

COURTYARD WALL AT ROOF ON SOUTH SIDE 4
SCALE: 3/4" = 1'-0"

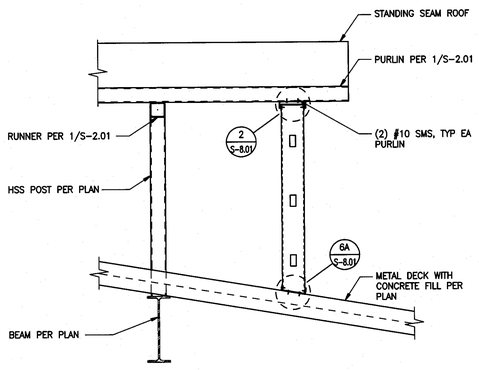

STANDING SEAM ROOF SECTION AT GL J.5 5
SCALE: 3/4" = 1'-0"

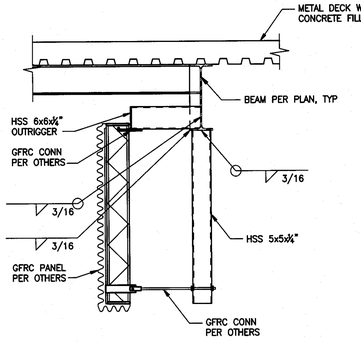

SECTION AT EAST WALL BETWEEN J AND J.5 6
SCALE: 3/4" = 1'-0"

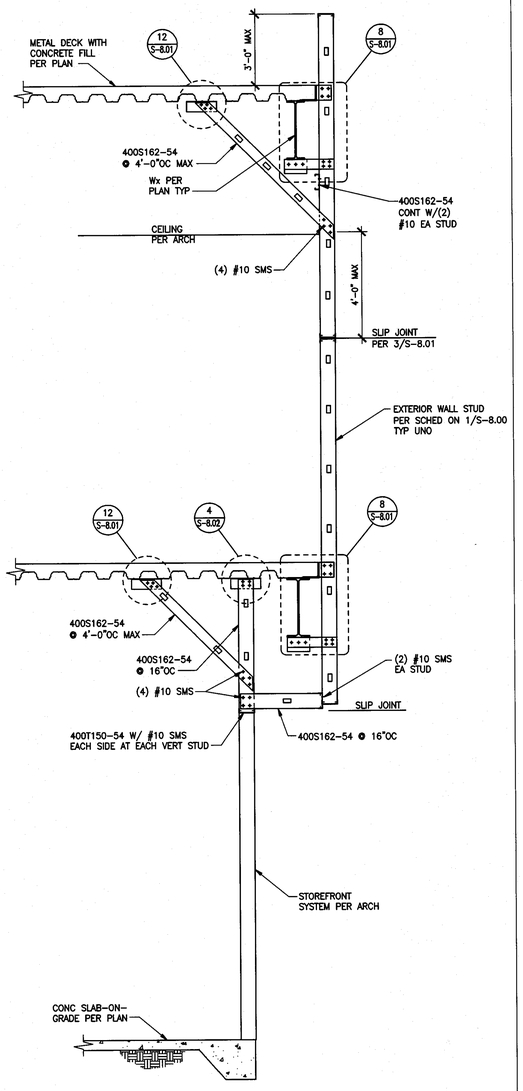

WEST WALL SECTION NEAR H.8 2
SCALE: 1/2" = 1'-0"

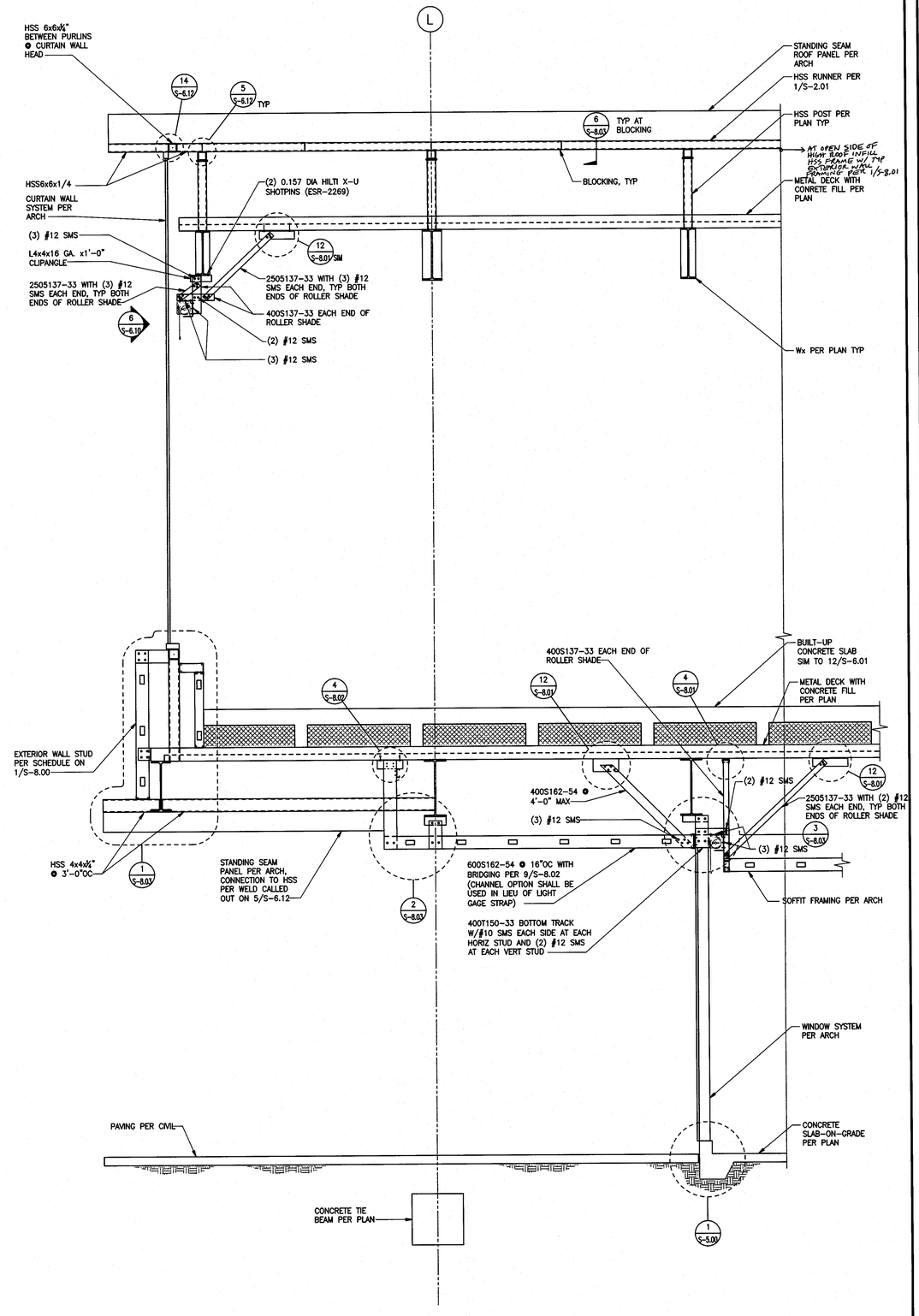

SOUTH WALL SECTION @ L 1
SCALE: 1/2" = 1'-0"

File: W:\20071\107833 - Antelope Valley College - Health and Science Building\detail\S-702.dwg
Plotted: 9/16/09 at 1:22pm By: cvallejo
XREFS: a-PBSC-S-WNW.dwg a-WSC1-A-WNW.dwg 107833_tb.dwg a-WSC2-S-WNW.dwg A-0609-WSC2.dwg X0FE-X0FT-0BSP-E-WNW2.dwg a-WSC2-E-WNW.dwg

tBP
architecture
planning
interiors
management

tBP/Architecture
5455 Wilshire Boulevard, Suite 1200
Los Angeles, CA 90036-4242
ph: 323. 556. 3788 fx: 323. 556. 3799

LICENSED ARCHITECT
STATE OF CALIFORNIA

architect

kpff Consulting Engineers
301 North Lake Avenue, Suite 550
Pasadena, California 91101
626.578.1921 Fax 626.578.0921

REGISTERED PROFESSIONAL ENGINEER
STRUCTURAL
STATE OF CALIFORNIA

consultant

IDENTIFICATION STAMP
DIV. OF THE STATE ARCHITECT
OFFICE OF REGULATION SERVICES
File No. 19-C11
Appl No. 03-112201
AC ___ BS ___ SS ___
DATE 10.13.09

DSA Los Angeles Basin Regional Office
700 North Alameda Street, Suite 5-500
Los Angeles, California 90012
ph: 213/897-3995 fx: 213/897-3159/0726

agency

ANTELOPE VALLEY COLLEGE HEALTH & SCIENCE BUILDING

ANTELOPE VALLEY COMMUNITY COLLEGE DISTRICT
3041 WEST AVENUE K
LANCASTER, CA 93536-5426

owner

tBP project number: 20641.00
file name: S-702.DWG
drawn by: SG checked by: GD
date: JULY 30, 2009 - 100% CD

Rev:	date:	description:

THIS DRAWING AND THE DESIGNS, DEPICTIONS, IDEAS AND OTHER INFORMATION CONTAINED HEREIN CONSTITUTE UNPUBLISHED WORK OF tBP/ARCHITECTURE AND SHALL REMAIN THE PROPERTY OF tBP/ARCHITECTURE IN PERPETUITY. NO PART THEREOF SHALL BE REPRODUCED, DISCLOSED, DISTRIBUTED, SOLD, PUBLISHED OR OTHERWISE USED IN ANY WAY WITHOUT THE ADVANCED EXPRESS WRITTEN CONSENT OF tBP/ARCHITECTURE.

drawing title:
EXTERIOR
WALL SECTIONS

drawing no.:
S-7.02
drawing of