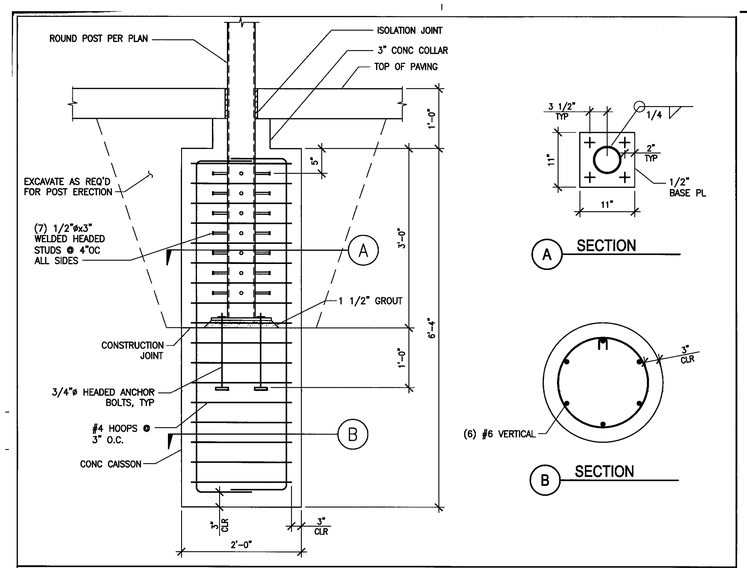

GREENHOUSE POST FOOTING 1"=1'-0" **6**

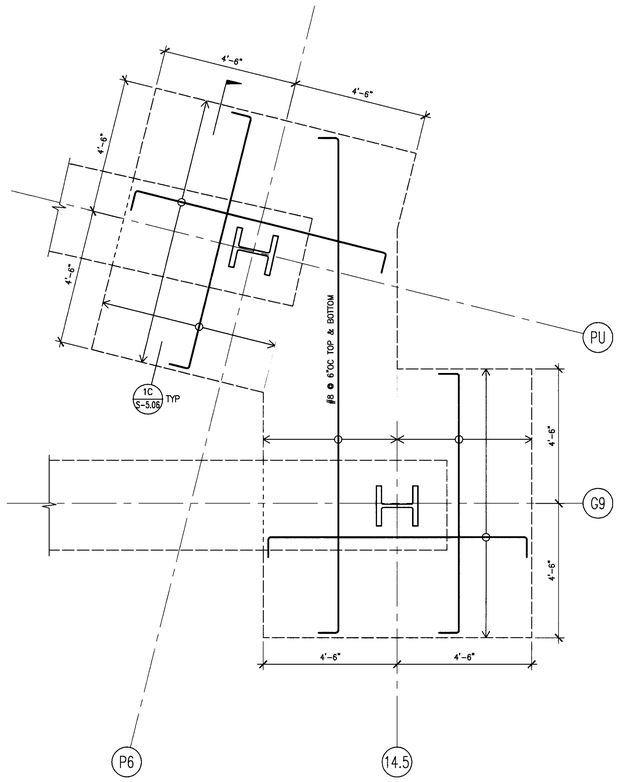

NOTES:

1. MOMENT FRAME BEAM ENCASED IN CONCRETE NOT SHOWN FOR CLARITY.
2. REINFORCEMENT SHALL BE #8 @ 9" OC TOP & BOTTOM WITH 90° STANDARD HOOKS UNLESS NOTED OTHERWISE.
3. SEE 1/S-5.06 FOR ADDITIONAL FOUNDATION DETAILS.

PARTIAL FOUNDATION PLAN - FOOTING TYPE MF5 1/2"=1'-0" **4**

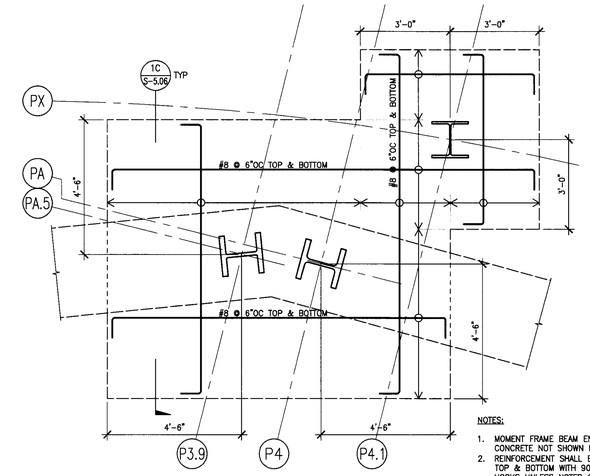

NOTES:

1. MOMENT FRAME BEAM ENCASED IN CONCRETE NOT SHOWN FOR CLARITY.
2. REINFORCEMENT SHALL BE #8 @ 9" OC TOP & BOTTOM WITH 90° STANDARD HOOKS UNLESS NOTED OTHERWISE.
3. SEE 1/S-5.06 FOR ADDITIONAL FOUNDATION DETAILS.

PARTIAL FOUNDATION PLAN - FOOTING TYPE MF2 1/2"=1'-0" **1**

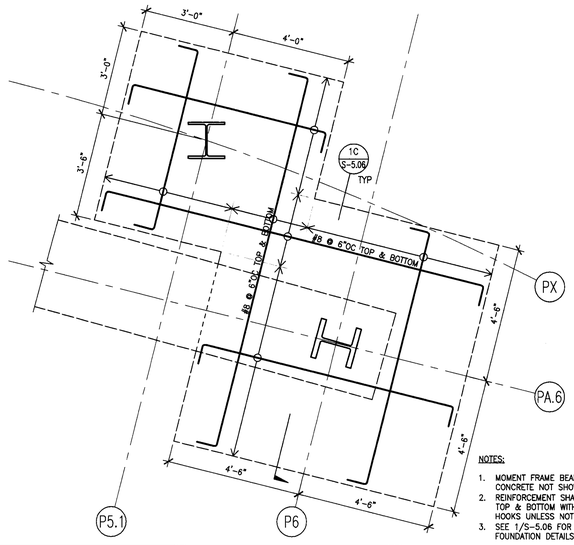

NOTES:

1. MOMENT FRAME BEAM ENCASED IN CONCRETE NOT SHOWN FOR CLARITY.
2. REINFORCEMENT SHALL BE #8 @ 9" OC TOP & BOTTOM WITH 90° STANDARD HOOKS UNLESS NOTED OTHERWISE.
3. SEE 1/S-5.06 FOR ADDITIONAL FOUNDATION DETAILS.

PARTIAL FOUNDATION PLAN - FOOTING TYPE MF3 1/2"=1'-0" **2**

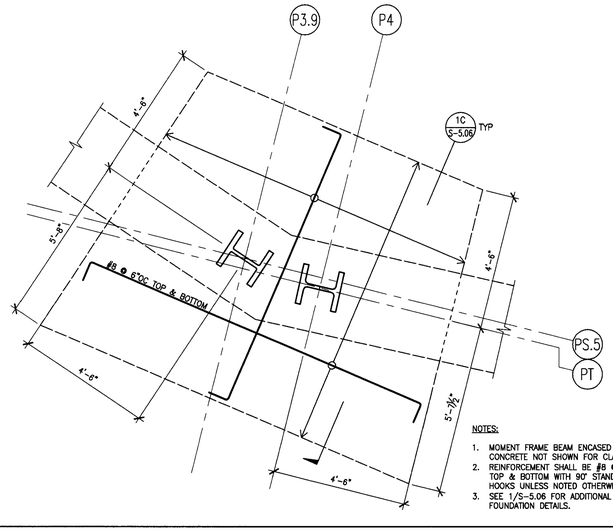

NOTES:

1. MOMENT FRAME BEAM ENCASED IN CONCRETE NOT SHOWN FOR CLARITY.
2. REINFORCEMENT SHALL BE #8 @ 9" OC TOP & BOTTOM WITH 90° STANDARD HOOKS UNLESS NOTED OTHERWISE.
3. SEE 1/S-5.06 FOR ADDITIONAL FOUNDATION DETAILS.

PARTIAL FOUNDATION PLAN - FOOTING TYPE MF4 1/2"=1'-0" **5**

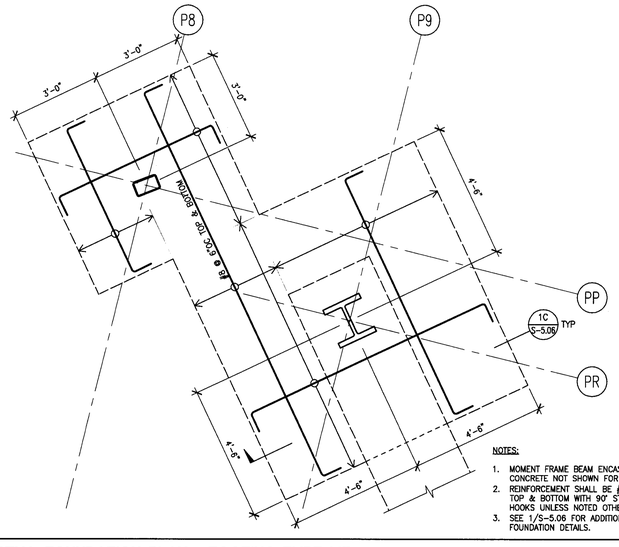

NOTES:

1. MOMENT FRAME BEAM ENCASED IN CONCRETE NOT SHOWN FOR CLARITY.
2. REINFORCEMENT SHALL BE #8 @ 9" OC TOP & BOTTOM WITH 90° STANDARD HOOKS UNLESS NOTED OTHERWISE.
3. SEE 1/S-5.06 FOR ADDITIONAL FOUNDATION DETAILS.

PARTIAL FOUNDATION PLAN - FOOTING TYPE MF6 1/2"=1'-0" **3**

tBP
architecture
planning
interiors
management

tBP/Architecture
5455 Wilshire Boulevard, Suite 1200
Los Angeles, CA 90036-4242
ph: 323. 556. 3788 fx: 323. 556. 3799

LICENSED ARCHITECT
NO. C8684
STATE OF CALIFORNIA

architect

kpff Consulting Engineers
301 North Lake Avenue, Suite 600
Pasadena, California 91101
(626) 578-1921 Fax (626) 578-0921

REGISTERED PROFESSIONAL ENGINEER
M. A. SIVE
S.E. 4399
exp. 12/31/09
STRUCTURAL
STATE OF CALIFORNIA

consultant

IDENTIFICATION STAMP
DIV. OF THE STATE ARCHITECT
OFFICE OF REGULATION SERVICES
File No. 19-C11
Appl No. 03-112201
AC ___ RS ___ SS SDA
DATE 10-13-05

DSA Los Angeles Basin Regional Office
700 North Alameda Street, Suite 5-500
Los Angeles, California 90012
ph: 213/897-3995 fx: 213/897-3159/0726

agency

ANTELOPE VALLEY COLLEGE HEALTH & SCIENCE BUILDING

ANTELOPE VALLEY COMMUNITY COLLEGE DISTRICT
3041 WEST AVENUE K
LANCASTER, CA 93536-5426

owner

tBP project number : 206410.00

file name: S-502.DWG

drawn by: SG checked by: GO

date: JULY 30, 2004 - 100% CD

Rev:	date:	description:

THIS DRAWING AND THE DESIGNS, DEPICTIONS, IDEAS AND OTHER INFORMATION CONTAINED HEREIN CONSTITUTE UNPUBLISHED WORK OF tBP/ARCHITECTURE AND SHALL NOT BE PROPERTY OF tBP/ARCHITECTURE IN PERPETUITY. NO PART THEREOF SHALL BE REPRODUCED, DISCLOSED, DISTRIBUTED, SOLD, PUBLISHED OR OTHERWISE USED IN ANY WAY WITHOUT THE ADVANCED EXPRESS WRITTEN CONSENT OF tBP/ARCHITECTURE.

drawing title:

FOUNDATION DETAILS

drawing no.:

S-5.06A

drawing of

File: K:\206410\2007\107833 - Antelope Valley College - Health and Science Building\ustruct\S-506A.dwg
Plotted: 9/14/07 at 2:25 PM by SGONZALES
XREFS: tBP833_tb.dwg 107833_TBP.dwg