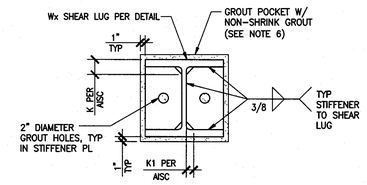

E SECTION AT SHEAR LUG

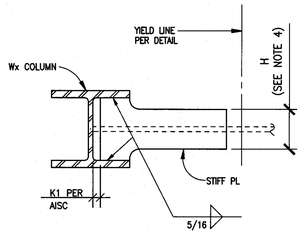

B SECTION

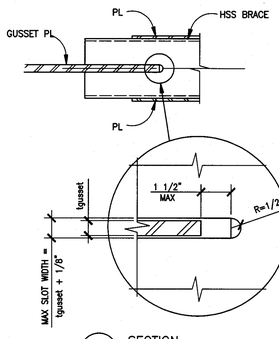

C SECTION

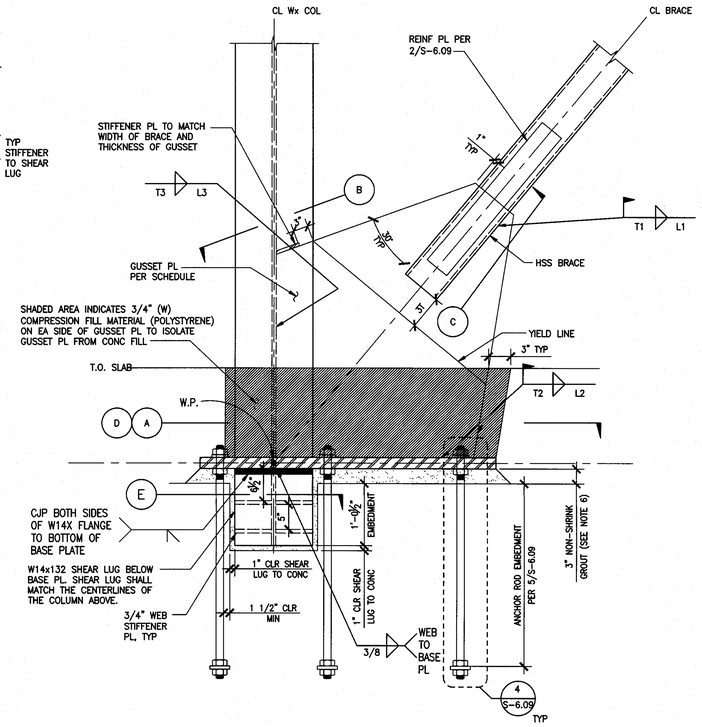

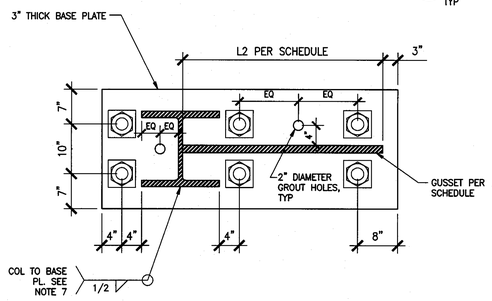

A CONNECTION E1 TYPE PLAN VIEW

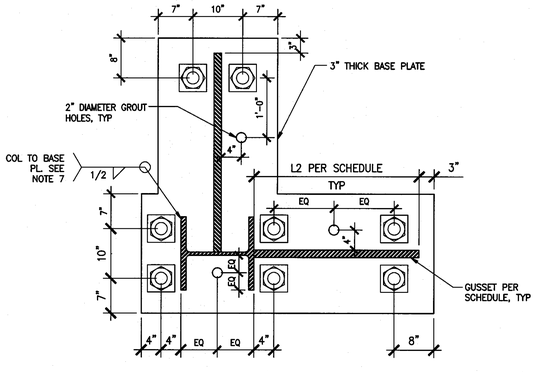

D CONNECTION D12 AND E2 PLAN VIEW

NOTES:

1. ALL PLATES SHALL BE A572, GR 50 STEEL.
2. "3T" INDICATES 3 TIMES THE GUSSET PLATE THICKNESS PER SCHEDULE
3. SHOP DRAWINGS SHALL BE SUBMITTED TO SCALE FOR REVIEW AND APPROVAL. SEE S-6.04A FOR SHOP DRAWING SUMITTAL REQUIREMENTS.
4. H SHALL MATCH THE DEPTH OF THE BRACE
5. FOR ANCHOR REINFORCEMENT, SEE 5/S-6.09 AND 1/S-5.07
6. GROUT STRENGTH SHALL BE 5000 PSI MIN. IN GROUT POCKET FOR SHEAR LUG, SELF CONSOLIDATING CONCRETE (SCC) MAY BE REQUIRED FOR PROPER CONSOLIDATION IN THE CONCRETE BLOCKOUT.
7. DO NOT WELD IN "K" REGIONS OF THE WEB PER AISC.
8. CONNECTIONS SHOWN SHALL CONFORM TO SEISMIC LOAD RESISTING NOTES ON S-0.00.

CONNECTION ID	PLATE THICKNESS	WELD THICKNESS			PLATE INTERFACE LENGTH (in.)		
	GUSSET (T)	T1	T2	T3	L1	L2	L3
E1	1 1/2	1/2	5/8	1/2	29	40	38
E2	1 1/2	5/8	3/4	3/4	32	43	41

GUSSET CONNECTION DETAIL - TYPE E 1"=1'-0" **2**

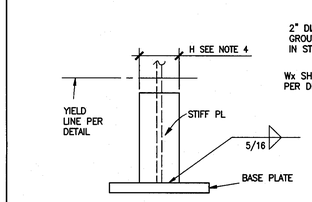

B SECTION

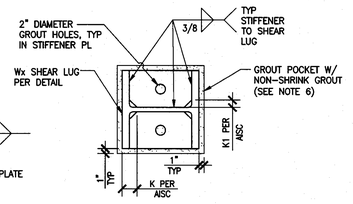

E SECTION AT SHEAR LUG

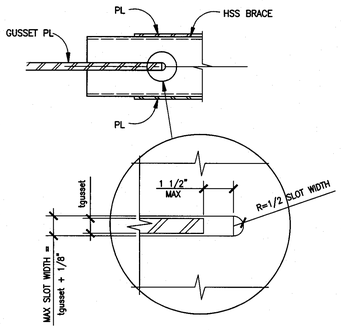

C SECTION

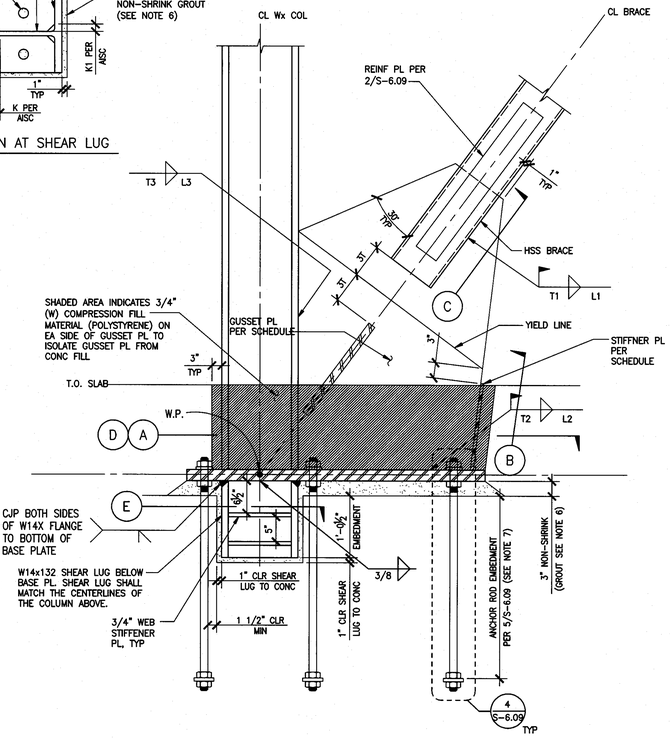

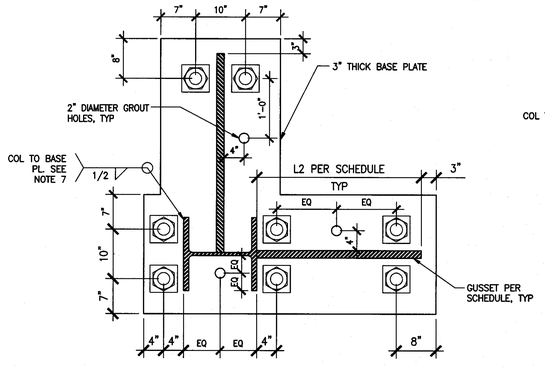

D CONNECTION D12 AND E2 PLAN VIEW

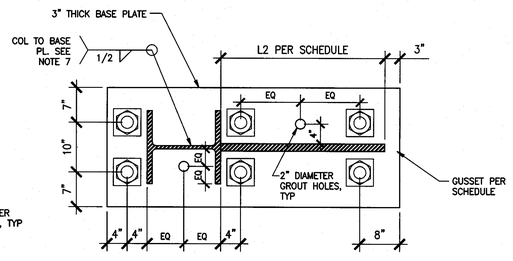

A CONNECTION D TYPE PLAN VIEW

CONNECTION ID	PLATE THICKNESS			WELD THICKNESS			PLATE INTERFACE LENGTH (in.)		
	GUSSET (T)	STIFFENER	SIDE	T1	T2	T3	L1	L2	L3
D1	1 1/2	1 1/2	–	5/8	5/8	3/4	32	38	47
D2	1 1/2	1 1/2	3/4	5/8	1/2	3/4	32	40	52
D3	1 1/2	1 1/2	–	5/8	5/8	3/4	32	37	45
D4	1 1/2	–	–	5/8	3/4	3/4	32	36	42
D5	1 1/2	1 1/2	–	1/2	1/2	1/2	29	34	42
D6	1 1/2	–	–	1/2	1/2	1/2	29	33	41
D7	1 1/2	1 1/2	–	1/2	1/2	1/2	29	35	45
D8	1 1/2	–	–	1/2	1/2	1/2	29	33	39
D9	1 1/2	–	–	1/2	1/2	5/8	29	33	41
D10	1 1/2	1 1/2	–	1/2	1/2	1/2	29	34	43
D11	1 1/2	–	–	1/2	1/2	1/2	29	33	41
D12	1 1/2	–	–	1/2	1/2	1/2	29	33	41
D13	1 1/2	1 1/2	–	1/2	1/2	1/2	29	34	43
D14	1 1/2	–	–	1/2	1/2	1/2	29	33	41
D15	1 1/2	–	–	1/2	1/2	1/2	29	34	38

NOTES:

1. ALL PLATES SHALL BE A572, GR 50 STEEL.
2. "3T" INDICATES 3 TIMES THE GUSSET PLATE THICKNESS PER SCHEDULE
3. SHOP DRAWINGS SHALL BE SUBMITTED TO SCALE FOR REVIEW AND APPROVAL. SEE S-6.04A FOR SHOP DRAWING SUMITTAL REQUIREMENTS.
4. H SHALL MATCH THE DEPTH OF THE BRACE
5. FOR ANCHOR REINFORCEMENT, SEE 5/S-6.09 AND 1/S-5.07
6. GROUT STRENGTH SHALL BE 5000 PSI MIN. IN GROUT POCKET FOR SHEAR LUG, SELF CONSOLIDATING CONCRETE (SCC) MAY BE REQUIRED FOR PROPER CONSOLIDATION IN THE CONCRETE BLOCKOUT.
7. DO NOT WELD IN "K" REGIONS OF THE WEB PER AISC.
8. AT GRID H.8/7 SEE DETAIL ON 1/S-5.07 FOR ANCHOR ROD EMBEDMENT AND PEDESTAL DETAILS.
9. CONNECTIONS SHOWN SHALL CONFORM TO SEISMIC LOAD RESISTING NOTES ON S-0.00.

GUSSET CONNECTION DETAIL - TYPE D 1"=1'-0" **1**

tBP architecture planning interiors management
tBP/Architecture
5455 Wilshire Boulevard, Suite 1200
Los Angeles, CA 90036-4242
ph: 323. 556. 3788 fx: 323. 556. 3799
architect

kpff Consulting Engineers
301 North Lake Avenue, Suite 600
Pasadena, California 91101
(626) 578-1921 Fax (626) 578-9161
consultant

IDENTIFICATION STAMP
DIV. OF THE STATE ARCHITECT
OFFICE OF REGULATION SERVICES
File No. 19-C11
Appl No. 03-112291
AC ___ RS ___ SS SEA
DATE 10 - 13 - 09

DSA Los Angeles Basin Regional Office
700 North Alameda Street, Suite 5-500
Los Angeles, California 90012
ph: 213/897-3995 fx: 213/897-3159/0726
agency

ANTELOPE VALLEY COLLEGE HEALTH & SCIENCE BUILDING

ANTELOPE VALLEY COMMUNITY COLLEGE DISTRICT
3041 WEST AVENUE K
LANCASTER, CA 93536-5426
owner

tBP project number : 20641.00
file name: S-607.DWG
drawn by: SG checked by: GD
date: JULY 30, 2009 - 100% CD

Rev:	date:	description:

THIS DRAWING AND THE DESIGNS, DEPICTIONS, IDEAS AND OTHER INFORMATION CONTAINED HEREIN CONSTITUTE UNPUBLISHED WORK OF tBP/ARCHITECTURE AND SHALL REMAIN THE PROPERTY OF tBP/ARCHITECTURE IN PERPETUITY. NO PART THEREOF SHALL BE REPRODUCED, DISCLOSED, DISTRIBUTED, SOLD, PUBLISHED OR OTHERWISE USED IN ANY WAY WITHOUT THE ADVANCED EXPRESS WRITTEN CONSENT OF tBP/ARCHITECTURE.

drawing title:
BRACE FRAME CONNECTION DETAILS

drawing no.:
S-6.08
drawing of

File: W:\20307.107833 - Antelope Valley College - Health and Science Building\ucfcmf\S-608.dwg
Plotted: 9/11/09 at 11:20am by ovelez
XREFs: 1978S3_tb.dwg