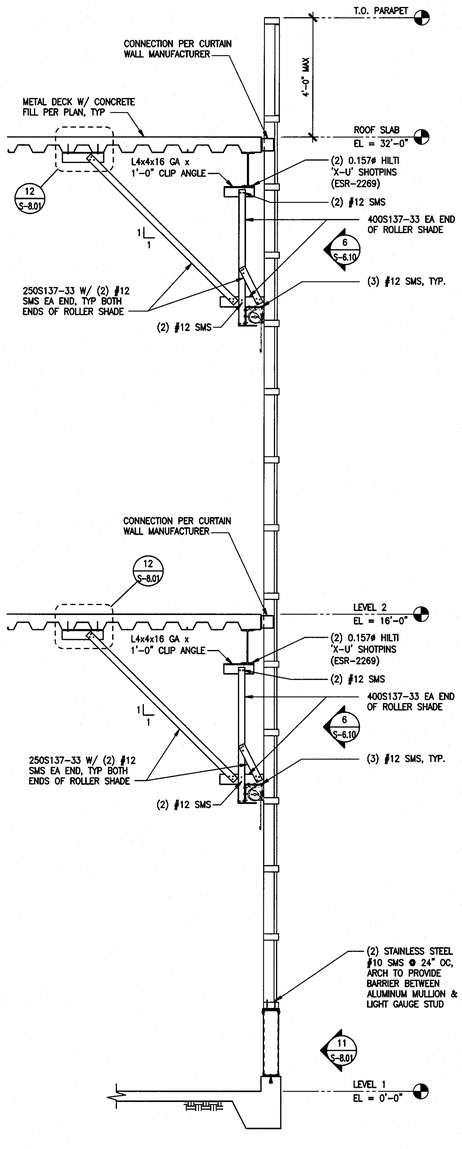

COURTYARD WALL SECTION BETWEEN E AND F 4
SCALE: 1/2" = 1'-0"

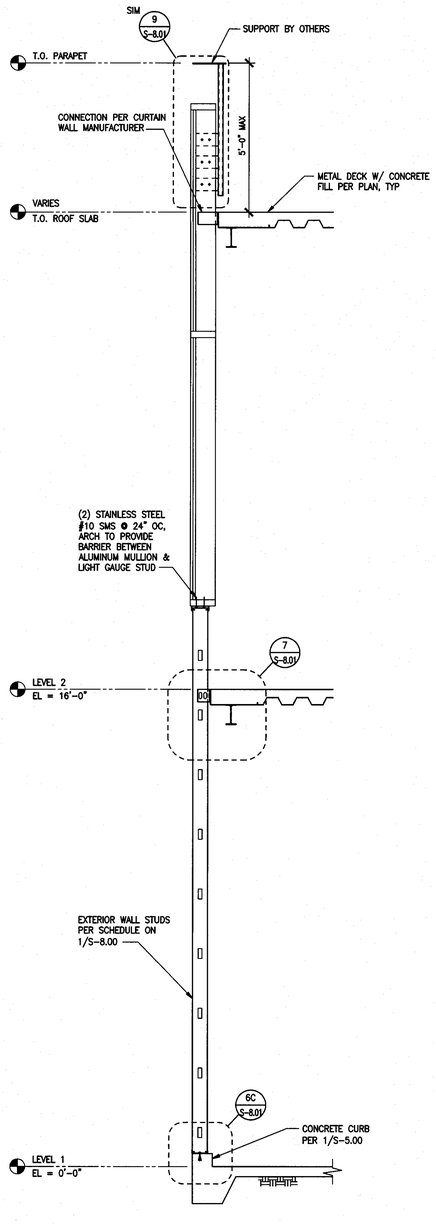

PLANETARIUM SECTION BETWEEN PE AND P1 3
SCALE: 1/2" = 1'-0"

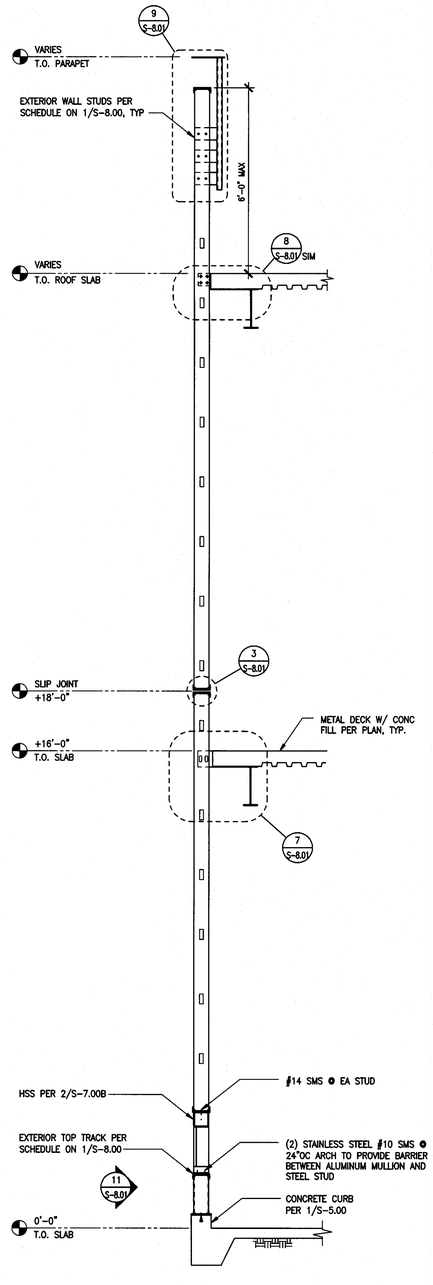

PLANETARIUM SECTION BTWN P3 & P4 2
SCALE: 1/2" = 1'-0"

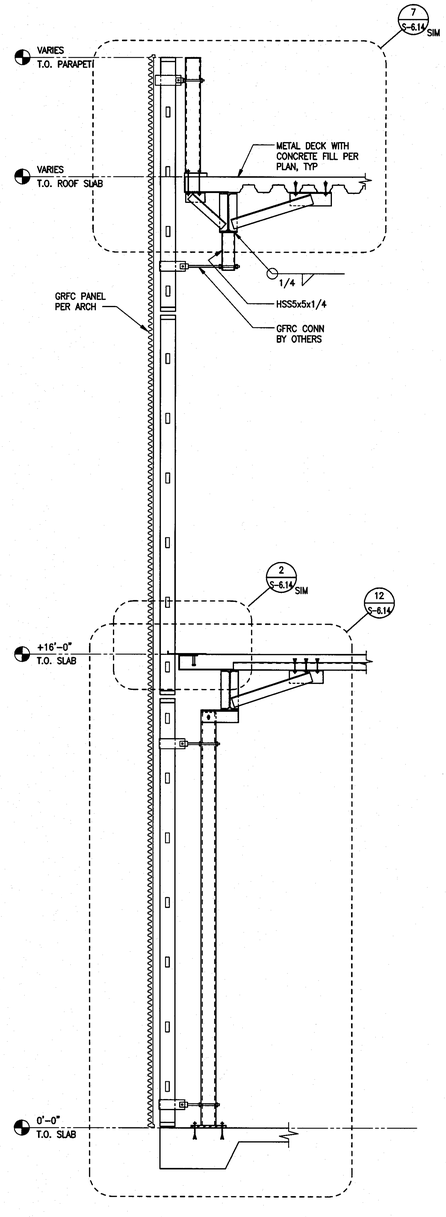

GFRC PANEL SECTION 1
SCALE: 1/2" = 1'-0"

tBP architecture planning interiors management

tBP/Architecture
5455 Wilshire Boulevard, Suite 1200
Los Angeles, CA 90036-4242
ph: 323. 556. 3788 fx: 323. 556. 3799

LICENSED ARCHITECT STATE OF CALIFORNIA

architect

kpff Consulting Engineers
301 North Lake Avenue, Suite 500
Pasadena, California 91101
626) 578-181 Fax: 626) 578-0481

REGISTERED PROFESSIONAL ENGINEER STRUCTURAL STATE OF CALIFORNIA Exp. 12/31/09

consultant

IDENTIFICATION STAMP
DIV. OF THE STATE ARCHITECT
OFFICE OF REGULATION SERVICES
File No. 19-C11
Appl No. 03-112201
AC ___ ES ___ SS ___
DATE 10.13-09

DSA Los Angeles Basin Regional Office
700 North Alameda Street, Suite 5-500
Los Angeles, California 90012
ph: 213/897-3995 fx: 213/897-3159/0726

agency

ANTELOPE VALLEY COLLEGE HEALTH & SCIENCE BUILDING

ANTELOPE VALLEY COMMUNITY COLLEGE DISTRICT
3041 WEST AVENUE K
LANCASTER, CA 93536-5426

owner

tBP project number : 20641.00
file name: S-703.DWG
drawn by: SG checked by: GD
date: JULY 30, 2009 - 100% CD

Rev:	date:	description:

THIS DRAWING AND THE DESIGNS, DEPICTIONS, IDEAS AND OTHER INFORMATION CONTAINED HEREIN CONSTITUTE UNPUBLISHED WORK OF tBP/ARCHITECTURE AND SHALL REMAIN THE PROPERTY OF tBP/ARCHITECTURE IN PERPETUITY. NO PART THEREOF SHALL BE REPRODUCED, DISCLOSED, DISTRIBUTED, SOLD, PUBLISHED OR OTHERWISE USED IN ANY WAY WITHOUT THE ADVANCED EXPRESS WRITTEN CONSENT OF tBP/ARCHITECTURE.

drawing title:
EXTERIOR WALL SECTIONS

drawing no.:
S-7.03
drawing of

Plot: W:\2007\107833 - Antelope Valley College - Health and Science Building\sdtoff\S-703.dwg
Plotted: 7/31/09 at 11:20 AM by sgonzalez
XREFs: ~WSEC-A-WINX.dwg ~WSEC-E-WINX.dwg 107833_tb.dwg ~WSEC-E-WINX.dwg