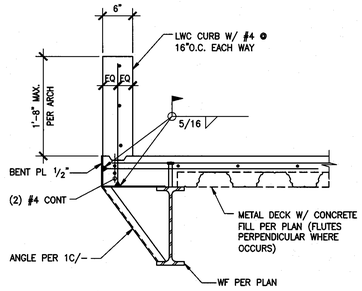

NOTE: SEE 1/- FOR BALANCE OF INFORMATION

SECTION AT HIGH CONC CURB 1"=1'-0" **14**

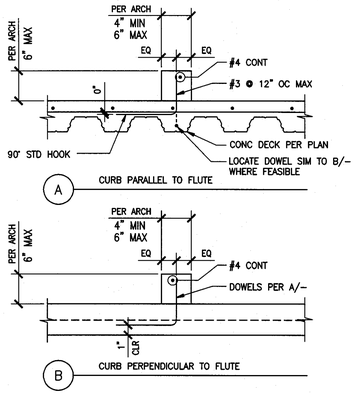

CONCRETE CURB DETAIL 1"=1'-0" **10**

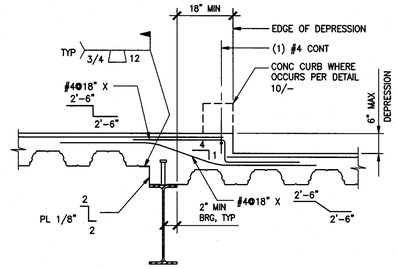

SLAB DEPRESSION DECK PARALLEL TO BEAM 1"=1'-0" **6**

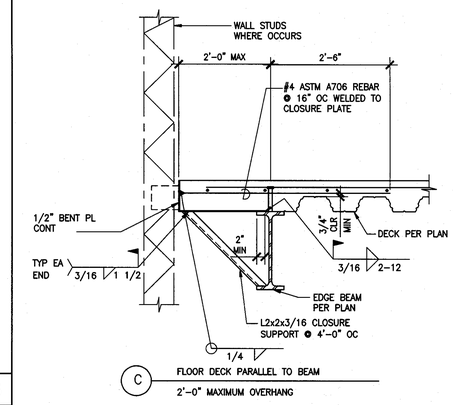

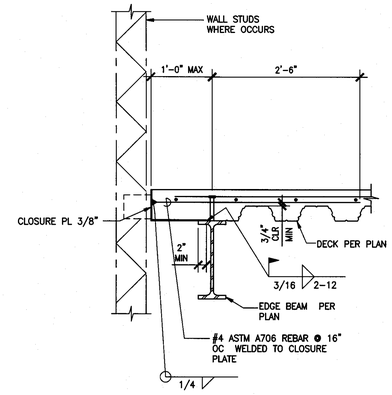

NOTES:

1. WELDED REBAR SHALL BE A706 MATERIAL
2. SEE SHEET S-8.00 FOR WALL STUD CONNECTIONS.
3. COORDINATE STUD CONNECTIONS TO ALIGN W/ WELDED DOWELS.

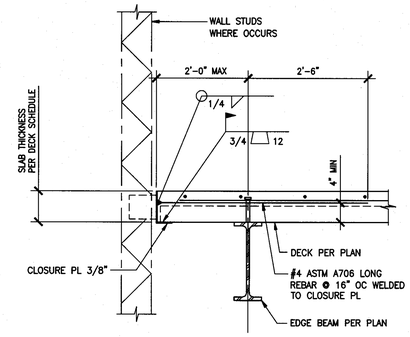

TYPICAL EDGE OF DECK DETAILS 1"=1'-0" **1**

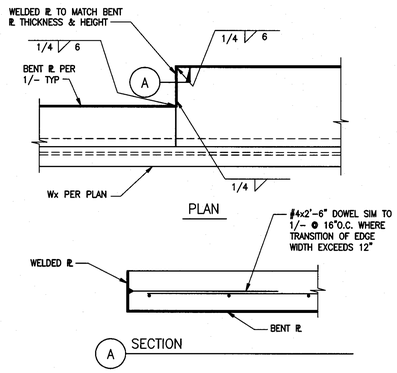

EDGE OF DECK TRANSITION DETAIL 1"=1'-0" **15**

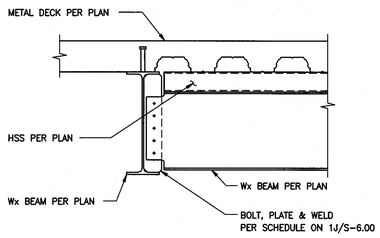

DEPRESSED BEAM CONNECTION SCHEDULE		
DEPRESSED BEAM	LEVEL BEAM	CONNECTION SCHEDULE
W14x	W16x	W12x
W16x	W21x	W16x
W16x	W24x	W16x
W18x	W24x	W18x
W24x	W24x	W18x

DEPRESSED BM CONNECTION DETAIL 1"=1'-0" **11**

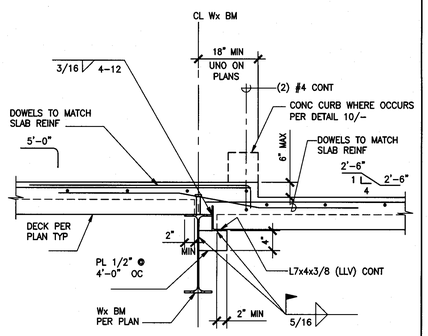

SLAB DEPRESSION DECK PERPENDICULAR TO BEAM 1"=1'-0" **7**

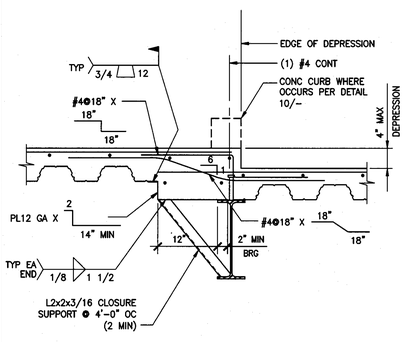

SLAB DEPRESSION DECK PARALLEL TO BEAM 1"=1'-0" **16**

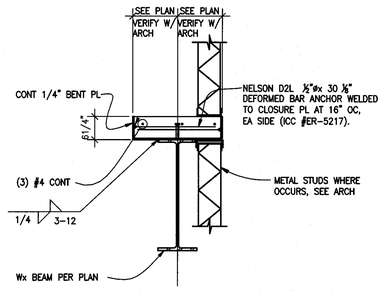

NOTE:
FOR BALANCE OF INFO REFER TO 1/-

TYP DOUBLE EDGE OF DECK DETAIL 1"=1'-0" **12**

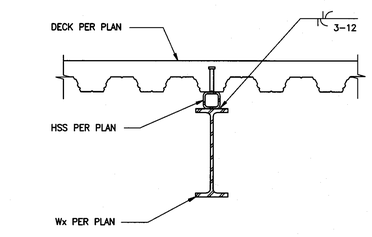

TYPICAL DEPRESSED BEAM 1"=1'-0" **8**

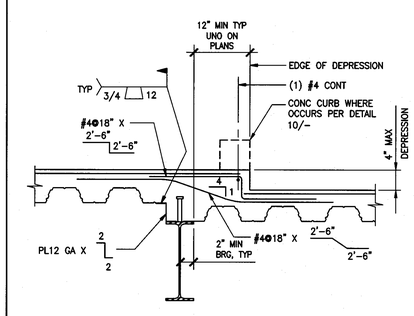

SLAB DEPRESSION DECK PARALLEL TO BEAM 1"=1'-0" **4**

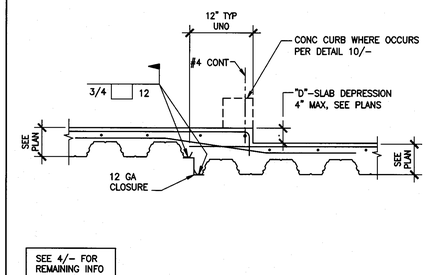

SEE 4/- FOR REMAINING INFO

TYP SLAB DEPRESSION (4" MAX) 1"=1'-0" **2**

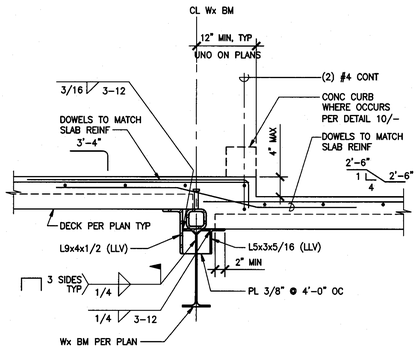

SLAB DEPRESSION DECK PERPENDICULAR TO BEAM 1"=1'-0" **17**

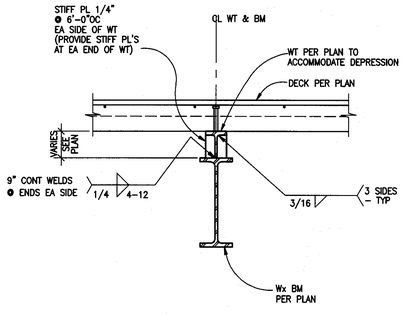

DEPRESSED BEAM WITH WT 1"=1'-0" **13**

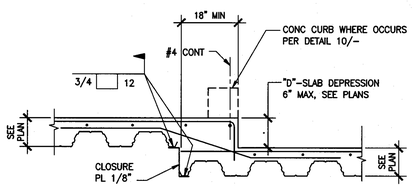

SEE 7/- FOR REMAINING INFO

TYPICAL SLAB DEPRESSION (6" MAX) 1"=1'-0" **9**

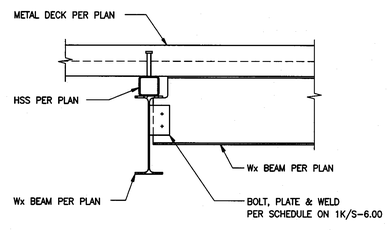

DEPRESSED BEAM CONNECTION SCHEDULE		
DEPRESSED BEAM	LEVEL BEAM	CONNECTION SCHEDULE
ANY DEPTH	W14x	W10x
	W16x	W12x
	W18x	W14x
	W21x	W16x
	W24x	W18x

DEPRESSED BM CONNECTION DETAIL 1"=1'-0" **5**

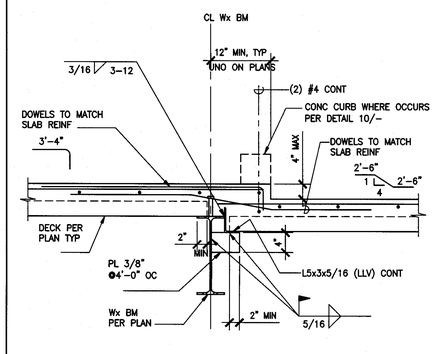

SLAB DEPRESSION DECK PERPENDICULAR TO BEAM 1"=1'-0" **3**

tBP
architecture planning interiors management
tBP/Architecture
5455 Wilshire Boulevard, Suite 1200
Los Angeles, CA 90036-4242
ph: 323. 556. 3788 fx: 323. 556. 3799
architect

kpff Consulting Engineers
301 North Lake Avenue, Suite 550
Pasadena, California 91101
(626) 578-161 Fax: (626) 578-161
consultant

IDENTIFICATION STAMP
DIV. OF THE STATE ARCHITECT
OFFICE OF REGULATION SERVICES
File No. 19-C11
Appl No. 03-112201
AC ____ FLS ____ SS SEP
DATE 10 . 13 - 09

DSA Los Angeles Basin Regional Office
700 North Alameda Street, Suite 5-500
Los Angeles, California 90012
ph: 213/897-3995 fx: 213/897-3159/0726
agency

ANTELOPE VALLEY COLLEGE HEALTH & SCIENCE BUILDING

ANTELOPE VALLEY COMMUNITY COLLEGE DISTRICT
3041 WEST AVENUE K
LANCASTER, CA 93536-5426

owner

tBP project number: 2064.00
file name: S-604.DWG
drawn by: SG checked by: GD
date: JULY 30, 2009 - 100% CD

Rev:	date:	description:

THIS DRAWING AND THE DESIGNS, DEPICTIONS, IDEAS AND OTHER INFORMATION CONTAINED HEREIN CONSTITUTE UNPUBLISHED WORK OF tBP/ARCHITECTURE AND SHALL REMAIN THE PROPERTY OF tBP/ARCHITECTURE IN PERPETUITY. NO PART THEREOF SHALL BE REPRODUCED, DISCLOSED, DISTRIBUTED, SOLD, PUBLISHED OR OTHERWISE USED IN ANY WAY WITHOUT THE ADVANCED EXPRESS WRITTEN CONSENT OF tBP/ARCHITECTURE.

drawing title:
TYPICAL STEEL DETAILS

drawing no.:
S-6.04
drawing of

File: W:\2007\107933 - Antelope Valley College - Health and Science Building\cert\S-604.dwg
Plotted: 9/16/09 at 1:29pm by: cvelez
XREFs: 107933-tb.dwg