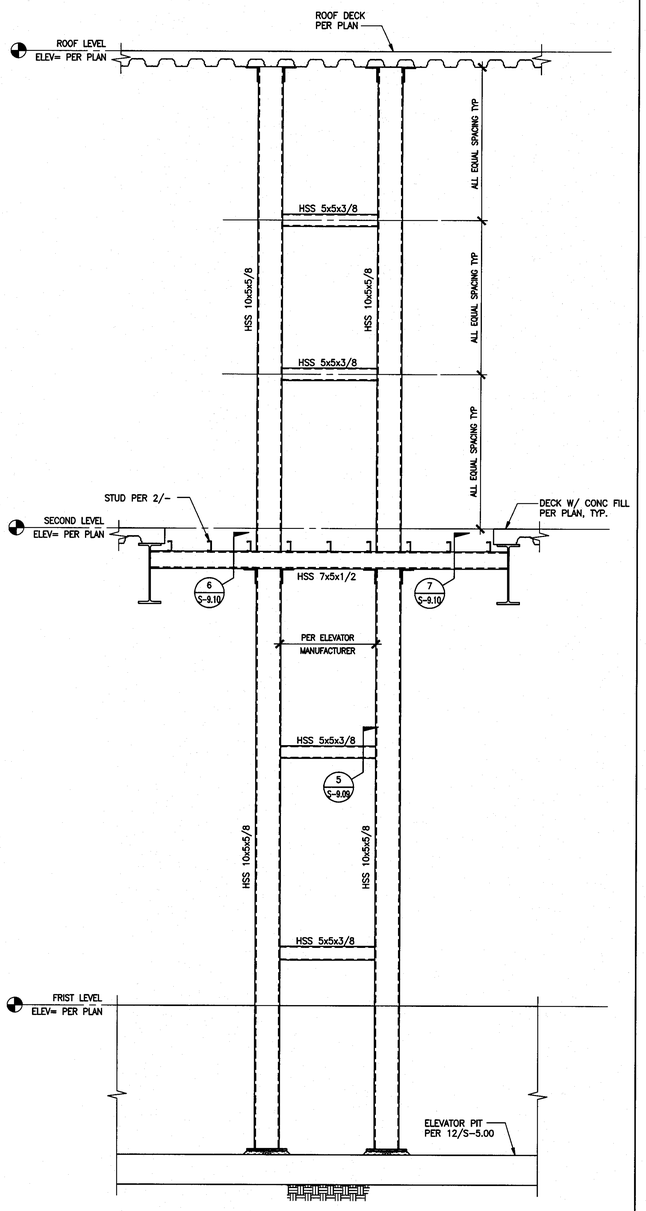

NOTES:
1. ATTACHMENT OF RAILS TO SUPPORT POSTS & STRUCTURE IS PER ELEVATOR MFR AND IS PART OF DEFERRED APPROVAL.
2. MINIMUM RAIL SIZE IS 15 LB/FT

ELEVATOR 3 GUIDERAIL SUPPORT ELEVATION 1/2"=1'-0" **3**

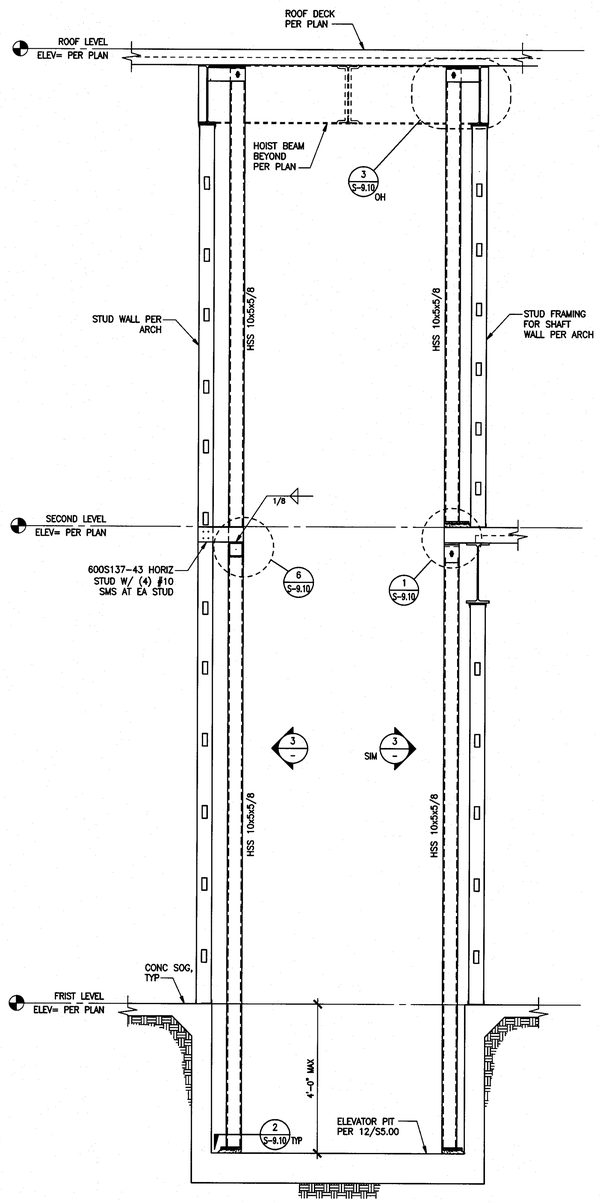

NOTES:
1. ATTACHMENT OF RAILS TO SUPPORT POSTS & STRUCTURE IS PER ELEVATOR MFR AND IS PART OF DEFERRED APPROVAL.
2. MINIMUM RAIL SIZE IS 15 LB/FT

ELEVATOR 3 GUIDERAIL SUPPORT ELEVATION 1/2"=1'-0" **2**

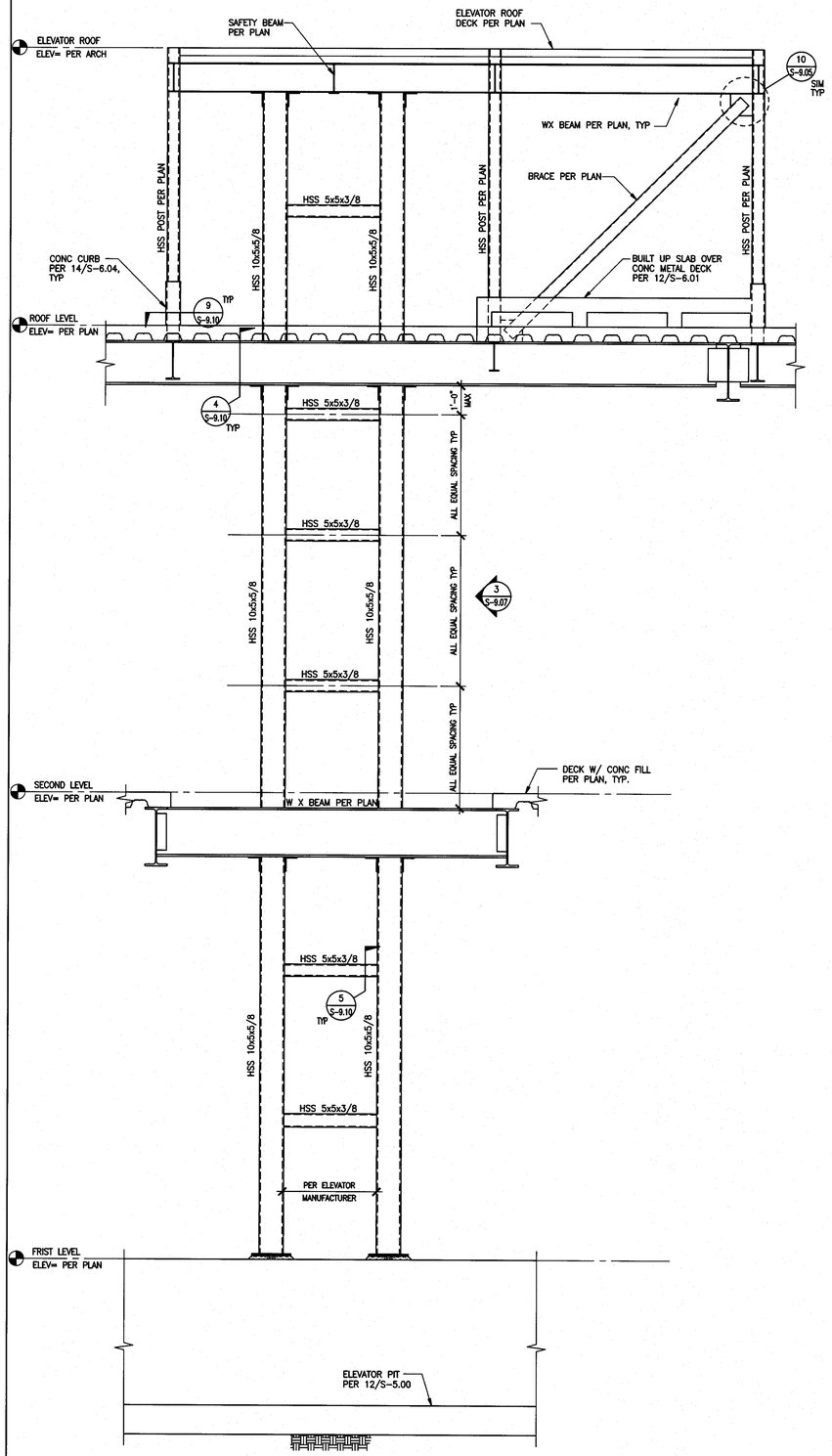

NOTES:
1. ATTACHMENT OF RAILS TO SUPPORT POSTS & STRUCTURE IS PER ELEVATOR MFR AND IS PART OF DEFERRED APPROVAL.
2. MINIMUM RAIL SIZE IS 15 LB/FT

ELEVATOR 2 GUIDERAIL SUPPORT ELEVATION 1/2"=1'-0" **1**

tBP architecture planning interiors management
LICENSED ARCHITECT STATE OF CALIFORNIA
tBP/architecture
5455 Wilshire Boulevard, Suite 1200
Los Angeles, CA 90036-4242
ph: 323. 556. 3788 fc: 323. 556. 3799
architect

kpff Consulting Engineers
301 North Lake Avenue, Suite 600
Pasadena, California 91101
626) 578-1921 Fax: 626) 578-1921
REGISTERED PROFESSIONAL ENGINEER ALBERT W. LAM No. 1399 Exp. 12/31/09 STRUCTURAL STATE OF CALIFORNIA
consultant

IDENTIFICATION STAMP
DIV. OF THE STATE ARCHITECT
OFFICE OF REGULATION SERVICES
File No. 19-C11
Appl No. 03-112201
AC ___ RS ___ SS SEP
DATE 10 13 09

DSA Los Angeles Basin Regional Office
700 North Alameda Street, Suite 5-500
Los Angeles, California 90012
ph: 213/897-3995 fc: 213/897-3159/0726
agency

ANTELOPE VALLEY COLLEGE HEALTH & SCIENCE BUILDING

ANTELOPE VALLEY COMMUNITY COLLEGE DISTRICT
3041 WEST AVENUE K
LANCASTER, CA 93536-5426

owner

tBP project number : 2064L00
file name: S-908.DWG
drawn by: SG checked by: GD
date: JULY 30, 2009 - 100% CD

Rev:	date:	description:

THIS DRAWING AND THE DESIGNS, DEPICTIONS, IDEAS AND OTHER INFORMATION CONTAINED HEREIN CONSTITUTE UNPUBLISHED WORK OF tBP/ARCHITECTURE AND SHALL REMAIN THE PROPERTY OF tBP/ARCHITECTURE IN PERPETUITY. NO PART THEREOF SHALL BE REPRODUCED, DISCLOSED, DISTRIBUTED, SOLD, PUBLISHED OR OTHERWISE USED IN ANY WAY WITHOUT THE ADVANCED EXPRESS WRITTEN CONSENT OF tBP/ARCHITECTURE.

drawing title:
ELEVATOR GUIDERAIL SUPPORT ELEVATIONS

drawing no.:
S-9.08
drawing of

File: C:\DOCUME~1\mellis\LOCALS~1\Temp\AcPublish_1872\S-908.dwg
Plotted: 9/16/09 at 2:33pm By: mellis
XREFS: tBPA3S_Ttb.dwg